ORDER NO. VRD8712M156

Service Manual

National/Panasonic VHS PAL HQ

VHS Movie

NV-M7 E/EM B/EA EG/A EO/AM EN

General Description
Adjustment Procedures
Block/Schematic Diagrams
Exploded Views/Parts List

AC Adaptor

VW-AM7 E/BA B/EA EN/A EM

NV-M7

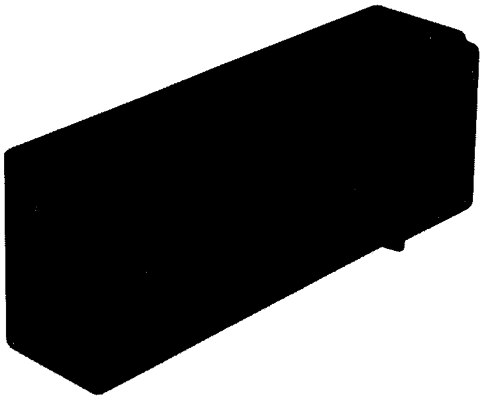

VW-AM7

National/Panasonic

Matsushita Electric Trading Co., Ltd.
P.O. Box 288, Central Osaka Japan

INTRODUCTION

This service manual contains technical information which will allow service technicians to understand and service this model.
Section 1 presents you with some general information of features and controls, enabling you to become familiar with each function.
Section 2 contributes to your mechanical and electrical adjustment as well disassembly and replacement procedures.
In the case of very common information relating to other models like mechanical adjustments, please refer to each service manual.
Section 3 contains block diagrams which offers you information for checking and understanding each circuit. Schematic diagrams which give you detailed information such as waveforms, voltage data, function e.t.c...
Section 4 contains exploded views and parts list.
Please place orders using the parts list and not the drawing reference numbers.
If the circuit is changed or modified, this information will be followed by supplementary service manual to be filed with original service manual.

VHS Movie

NV-M7 E/EM B/EA EG/A EO/AM EN

SPECIFICATIONS

ITEM	SPECIFICATION
POWER	Source: BATTERY; DC 12V Consumption; Recording mode; 7.3W (Battery operation) Stand-by mode; 1.0W (Battery operation)
RECORDING SYSTEM	4 rotary heads, helical scanning system PAL
TAPE FORMAT	VHS Cassette Tape (Tape width 12.7mm)
TAPE SPEED	23.39mm/s Record/Playback Time 3 hours with 180min. type tape FF/REW Time less than 12min. with 180min. type tape
CAMERA	PICK-UP ELEMENT: CCD (Charge Coupled Device)
	STANDARD ILLUMINATION: 1,400 lux
	MINIMUM REQUIRED ILLUMINATION: 10 lux
	LENS: Built-in 6:1 Power Zoom Lens with MACRO Function, Auto Iris, Auto Focus System, F1.2 (9~54mm), Filter Diameter/φ49mm
	VIEW FINDER: 2/3" B/W Electric View Finder
	WHITE BALANCE: Auto White Balance/ Indoor/Outdoor
VIDEO	HEADS: 4 rotary heads 1 flying (rotary) erase head
	INPUT (except E/B/EG): Adaptor (Multi); Y signal, $1.75^{+0.5}_{-0.2}$Vp-p 1.5kΩ DC1.95±0.2V C Burst signal, 500±75mVp-p (RED/BURST, 1.75±0.3Vp-p) 22kΩ DC1.75±0.2V OUTPUT: Adaptor (Multi); 1.0±0.15Vp-p 75Ω terminated

ITEM	SPECIFICATION
AUDIO	HEAD: 1 Stationary head (Normal Audio)
	INPUT (except E/B/EG): Adaptor (Multi); −10dB, 47kΩ unbalanced MIC IN (M3); −70dB, 4.7kΩ unbalanced
	OUTPUT: Adaptor (Multi); −8dB 600Ω unbalanced
WEIGHT	Approx. 2.3kg (without Battery Pack)
DIMENSIONS	120(W)×223(H)×398(D)mm with view finder turned down (without carrying handle)
STANDARD ACCESSORIES	1 pc. Battery Pack (except NV-M7EM/AM) 2 pc. Battery Pack (NV-M7EM) 1 pc. Battery Pack Charging Connector (except NV-M7AM/A) 1 pc. DIN-DIN Coaxial Cable (except NV-M7AM/A) 1 pc. AC Adaptor (except NV-M7AM/A) 1 pc. Shoulder Strap 1 pc. AV Output Adaptor 1 pc. AV Input Adaptor (NV-M7EA/EM/A) 1 pc. Car Battery Cord (NV-M7EA/EM/A) 1 pc. Pause Remote Control Unit (NV-M7EA/EM/A) 1 pc. System Carrying Case (except NV-M7EG/EN/AM) 1 pc. Character Generator (NV-M7B)

Weight and dimensions shown are approximate.
Specifications are subject to change without notice.

CONTENTS

SECTION 1 GENERAL DESCRIPTION

1. HOW TO USE VHS MOVIE

1-1. FEATURES 1-1
1-2. CONTROLS AND COMPONENTS 1-1
1-3. VHS MOVIE SYSTEM 1-3
1-4. EVF INDICATIONS 1-3

SECTION 2 ADJUSTMENT PROCEDURES

2-1. DISASSEMBLY PROCEDURES 2-1
2-1-1. DISASSEMBLY FLOW CHART 2-1
2-1-2. DETAILED DISASSEMBLY METHOD 2-1

2-2. REPLACEMENT PROCEDURES 2-6
2-2-1. Replacement of CCD Unit 2-6
2-2-2. Replacement of Zoom Motor Unit 2-6
2-2-3. Replacement of Focus Motor Unit 2-6
2-2-4. Replacement of DD Cylinder Unit 2-7
2-2-5. Replacement of Upper Cylinder Unit 2-7

2-3. MECHANICAL ADJUSTMENT PROCEDURES 2-8
2-3-1. Confirmation of Brake Torque 2-8
2-3-2. Back Tension Adjustment 2-9
2-3-3. Confirmation of A/C Head Height 2-9

2-4. ELECTRICAL ADJUSTMENT PROCEDURES 2-10
2-4-1. ELECTRICAL ADJUSTMENT FOR CAMERA SECTION 2-10
2-4-2. ELECTRICAL ADJUSTMENT FOR E.V.F. SECTION 2-22

LOCATION OF TEST POINTS & CONTROLS — Camera Section — 2-23
LOCATION OF TEST POINTS & CONTROLS — VTR Section — 2-25

2-4-3. ELECTRICAL ADJUSTMENT FOR VTR SECTION 2-26
POWER SECTION 2-27
SERVO SECTION 2-27
LUMINANCE & CHROMINANCE SECTION 2-28
AUDIO SECTION 2-30

SECTION 3 BLOCK DIAGRAMS & SCHEMATIC DIAGRAMS

3-1. CAMERA STAGE BLOCK DIAGRAM 3-1
3-2. POWER SUPPLY BLOCK DIAGRAM 3-6
3-3. SYSTEM CONTROL BLOCK DIAGRAM 3-7
3-4. SERVO BLOCK DIAGRAM 3-11
3-5. LUMINANCE & CHROMINANCE BLOCK DIAGRAM 3-13
3-6. PROCESS, SUB PROCESS & ENCODER SCHEMATIC DIAGRAM 3-16
3-7. PROCESS C.B.A. (VEP23063B), SUB PROCESS C.B.A. (VEP23068C) & ENCODER C.B.A. (VEP23061B) 3-21

Technical Information

1. SERVICE CAUTION

1. Preparation for Camera Adjustment

Remove cabinet parts and remove camera section from VTR refering disassembly section and place them as shown in Fig. 1.

Connection of Extension Cable (A) (VFK0430) and Camera Holder (refer to next item) are necessary for servicing.

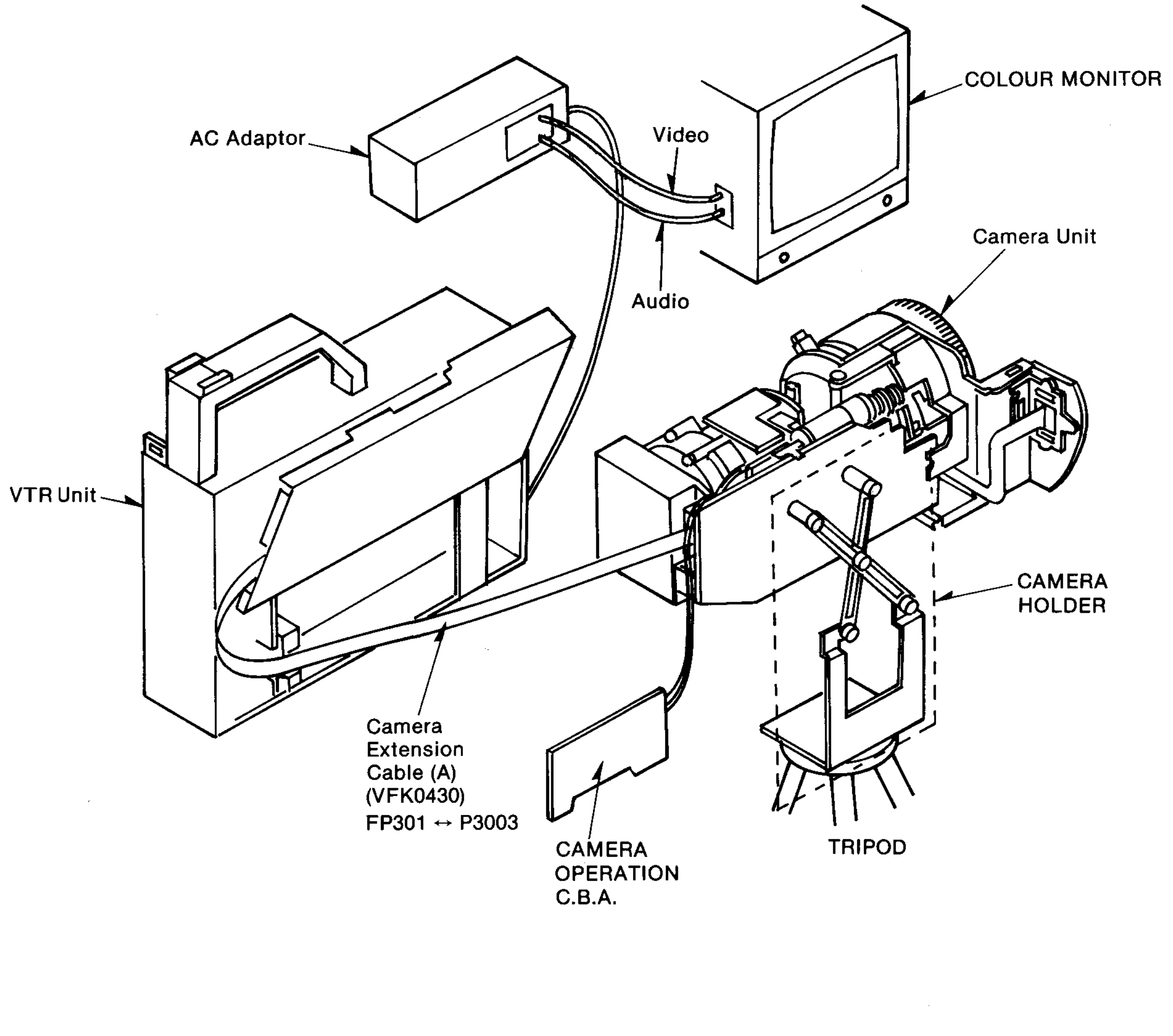

Fig. 1

2. How To Use Camera Holder Arm (VFK0431)

This Camera Holder Arm which is adjustable the span must be mounted to VFK0382 (Camera Holder of NV–M5) and it can be used with VFK0432 for camera adjustments or checking for NV–M7.

(A) –––	VFK0432	Holder Spacer (2pcs.)
(B) –––	VFK0431	Camera Holder Arm
(C) –––	XSN26+18	Screw (2pcs.)
(D) –––	VFK0382	Camera Holder

(1) Fix the Holder Arm (4) and (5) temporarily by screw (1) as shown in Fig. 2.
(2) Mount the Camera Holder Arm (B) to the Camera Holder (D) by screws (2) and (3) as shown in Fig. 3.
(3) Tightn the screws (C) with the Holder Spacers (A) as shown in Fig. 2.

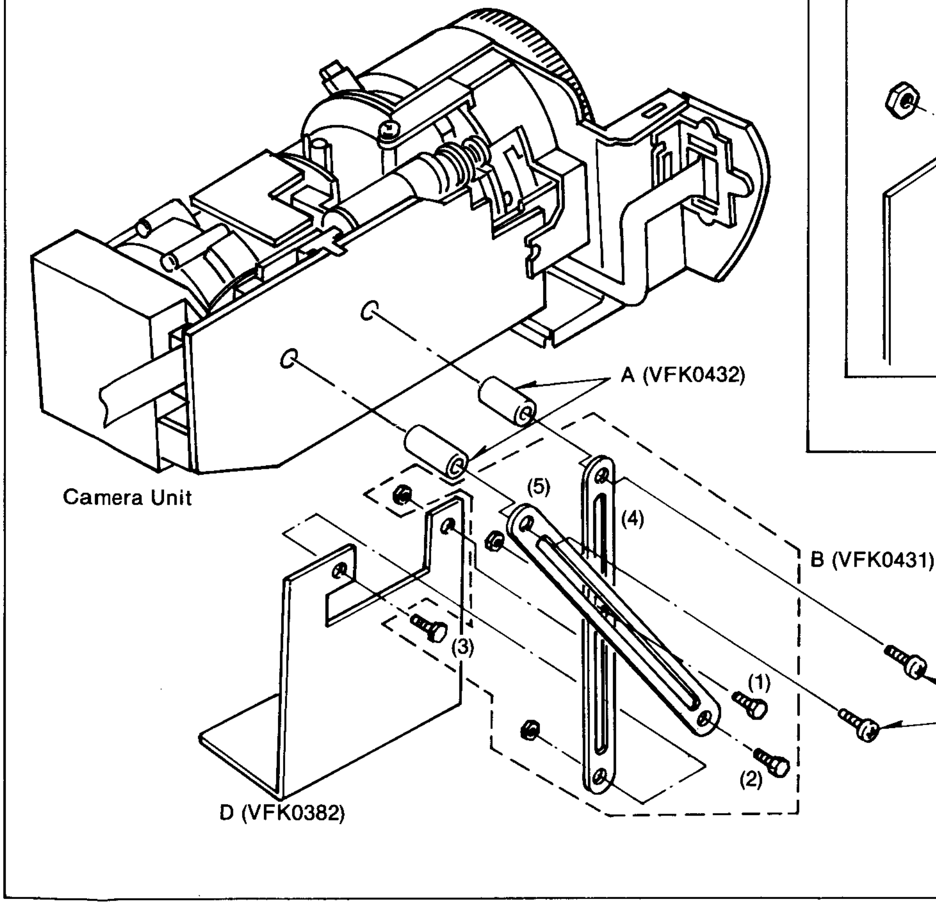

Fig. 2

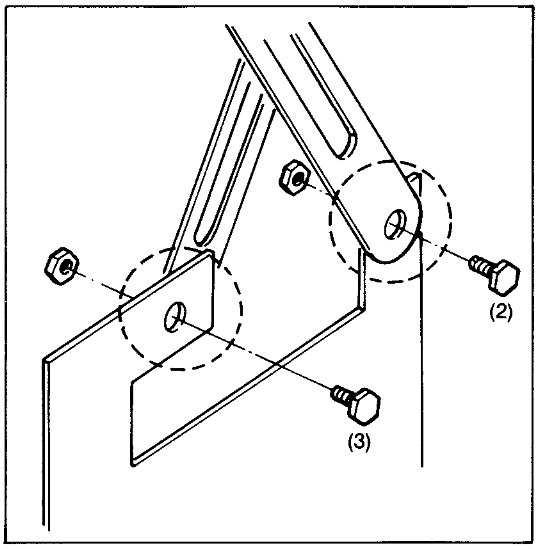

Fig. 3

3. Servicing the Camera Section

When servicing the Camera Section, connection of 18 Pin extension cable (B) (VFK0380) and 2 Pin extension cable (C) (VFKS0060) are necessary as shown in Fig. 4.

4. Connection of the Flexible Cables to Trap Connectors

a. Removal

1) On the trap Connector, pull out on both ends of the Locking Tab surrounding the cable end to release the Trap on the Connector. Then pull Flexible Cable out to remove as shown in Fig. 5.

b. Installation

1) Insert the end of the Flexible Cable into the Trap Connector so it lays smoothly across the slot.
2) Press the middle of the cable firmly against the Trap Connector slot, and hold it securly.
3) Without pinching the Cable, press the Locking Tabs in against the Trap Connector until both ends snap into their locked positions.
4) Pull lightly on the Cable to check for positive connection.

Note:
1) Take care when removing or installing the Flexible Cable to prevent Cable damage.

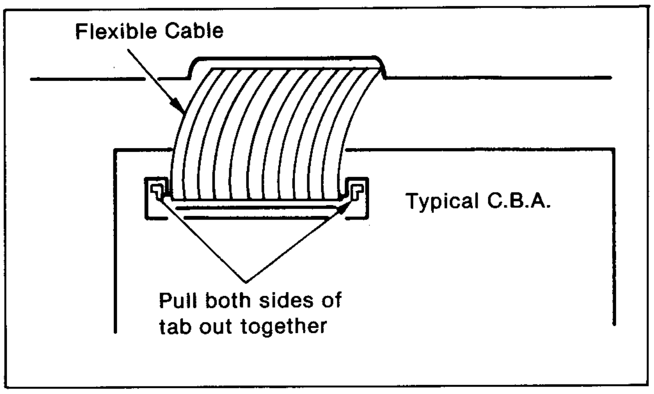

Fig. 5

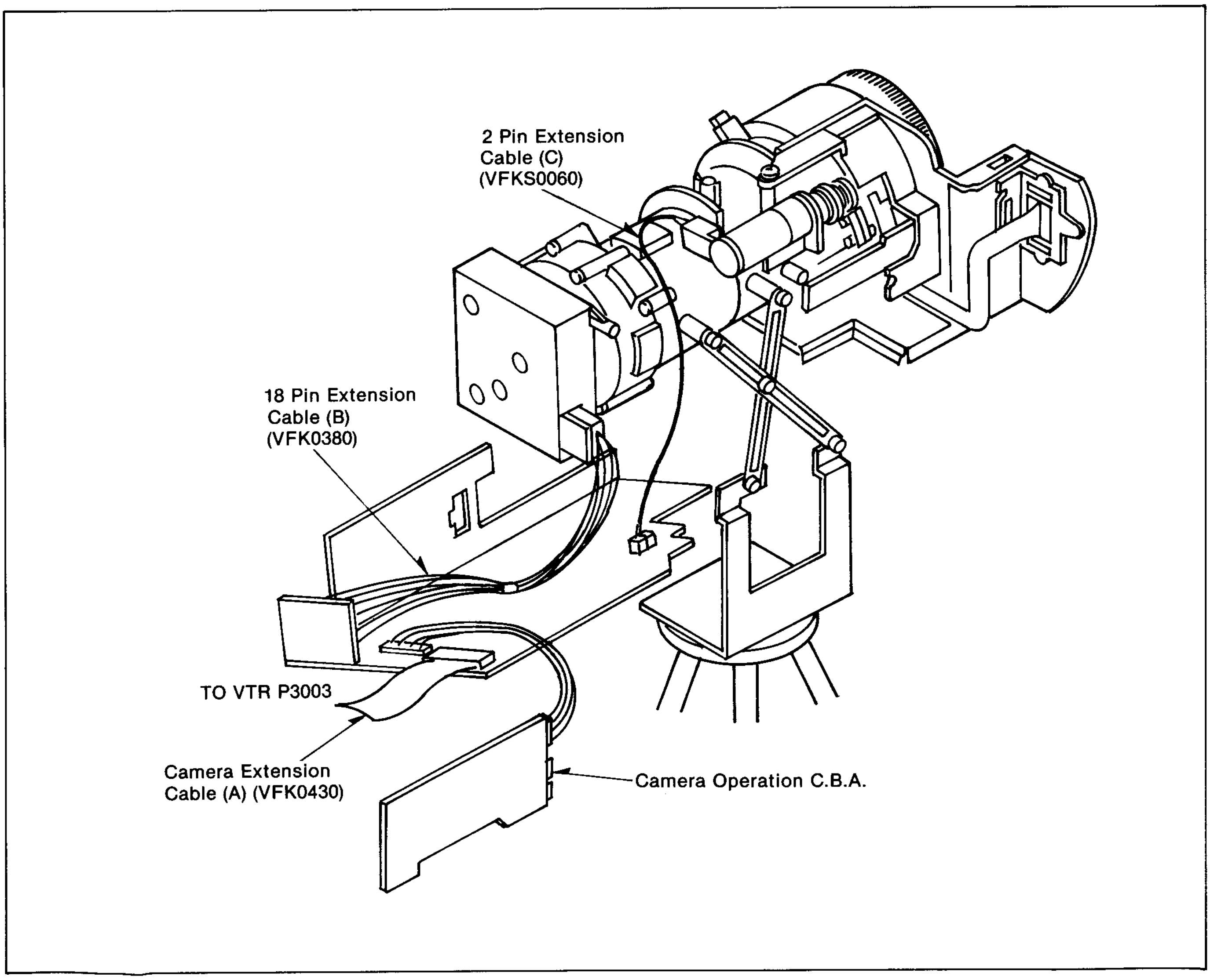

Fig. 4

Memo

3-8. AUTO FOCUS SCHEMATIC DIAGRAM 3-26
3-9. AUTO FOCUS C.B.A. (VEP28015E) 3-28
3-10. SENSOR & CDS SCHEMATIC DIAGRAM 3-31
3-11. SENSOR C.B.A. (VEP22073C) & CDS PACK C.B.A. (VEP22074A) 3-33
3-12. E.V.F. SCHEMATIC DIAGRAM 3-35
3-13. E.V.F. C.B.A. (VEP27033B) 3-37
3-14. POWER SUPPLY SCHEMATIC DIAGRAM 3-39
3-15. POWER SUPPLY Section In Main C.B.A. (VEP03482A) 3-41
3-16. SYSTEM CONTROL Section In Main C.B.A. (VEP03482A),
CAMERA OPERATION (I) C.B.A. (VEP00K79A) &
CAMERA OPERATION (II) C.B.A. (VEK3522) 3-43
3-17. OPERATION C.B.A. (VEP06452A) 3-43
3-18. SYSTEM CONTROL, OPERATION &
CAMERA OPERATION (I), (II) SCHEMATIC DIAGRAM 3-49
3-19. LUMINANCE, CHROMINANCE &
HEAD AMP SCHEMATIC DIAGRAM 3-54
3-20. LUMINANCE, CHROMINANCE &
HEAD AMP Section In Main C.B.A. (VEP03482A) 3-59
3-21. SERVO SCHEMATIC DIAGRAM 3-62
3-22. SERVO Section In Main C.B.A. (VEP03482A) 3-65
3-23. AUDIO SCHEMATIC DIAGRAM 3-67
3-24. AUDIO Section In Main C.B.A. (VEP03482A) 3-69
3-25. MAIN C.B.A. (VEP03482A) 3-71
3-26. CIRCUIT BOARD LAYOUT 3-76
3-27. ICs & TRANSISTORs INFORMATION 3-77
3-28. CAMERA INTERCONNECTION SCHEMATIC DIAGRAM 3-81
3-29. VTR INTERCONNECTION SCHEMATIC DIAGRAM 3-82

SECTION 4 EXPLODED VIEWS & PARTS LIST

4-1. EXPLODED VIEWS 4-1
1. CAMERA LENS SECTION 4-1
2. VTR MECHANISM SECTION (1) 4-2
3. VTR MECHANISM SECTION (2) 4-3
4. CHASSIS & FRAME SECTION 4-4
5. E.V.F. SECTION 4-5
6. PACKING PARTS & ACCESSORIES SECTION (NV-M7E/B/EO/EM/EA/A) 4-6
7. PACKING PARTS & ACCESSORIES SECTION (NV-M7EG/EN) 4-7
8. PACKING PARTS & ACCESSORIES SECTION (NV-M7AM) 4-8

MECHANICAL REPLACEMENT PARTS LIST
ELECTRICAL REPLACEMENT PARTS LIST

SECTION 1
GENERAL DESCRIPTION

1. HOW TO USE VHS MOVIE

1-1. FEATURES

1. PIEZO AUTO FOCUS

The focus is always automatically and precisely adjusted under all shooting situations. There is no need to manually adjust the focus; manual focus adjustment is also possible.

2. THE VHS MOVIE USES STANDARD VHS VIDEO CASSETTE

It extends the maximum recording time to a full 4 hours.

3. CUE & REVIEW PLAYBACK

Convenient for fast-forwarding or rewinding the tape while watching the picture.

4. COMPACT, LIGHTWEIGHT AND SUPER-PORTABLE

With a weight of only 2.3 kg, the VHS Movie is handy to use and carry along.

5. 3-WAY POWER SUPPLY

The VHS Movie can be operated on 3 different power sources: rechargeable battery pack, AC adaptor or car battery cord.

6. AUTO WHITE BALANCE

The white balance is fully automatically adjusted and continuously readjusted to any changes in illumination during shooting. Manual adjustment is also possible.

7. ALARM INDICATIONS

Various warning indications prevent operating mistakes and always assure successful results.

8. 6× POWER ZOOM LENS

Powerful, smooth zooming between wide-angle and telephoto is simple with convenient push-button control.

9. HIGH SPEED SHUTTER FUNCTION

This function makes it possible to catch even super-fast action with sharp contours and amazing detail.

10. AUDIO DUBBING FUNCTION

The Audio Dubbing function allows replacing the originally recorded sound with narration, back-ground music or special sound effects.

11. INSERT EDITING

Insert Editing (or Insert Recording) is handy for editing tapes by inserting new scenes into an already recorded video tape.

12. HQ (HIGH QUALITY) PICTURE SYSTEM

Video recorders carrying the HQ symbol mark feature the new VHS High Quality Picture System. This system assures complete compatibility with VTRs that use the conventional VHS system.

1-2. CONTROLS AND COMPONENTS

RIGHT VIEW

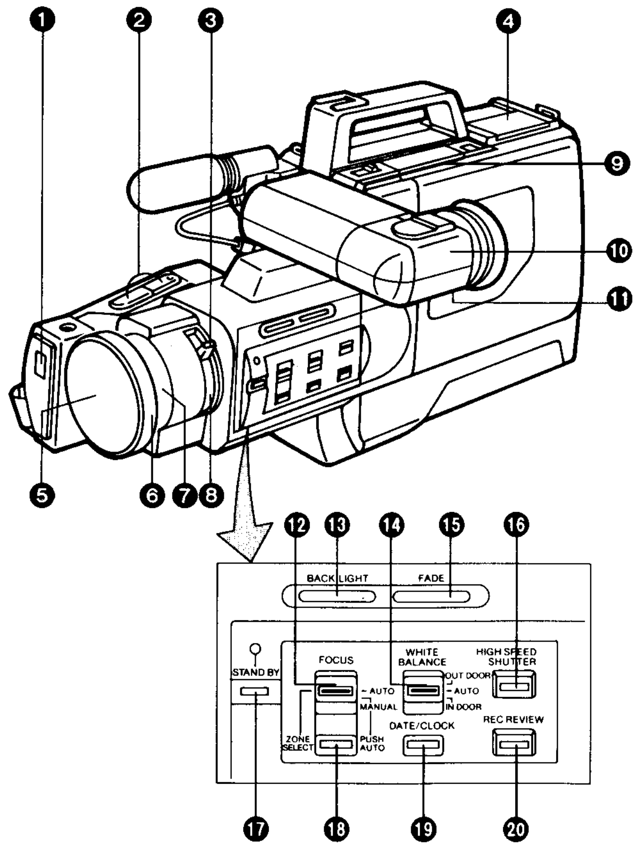

❶ White Balance Sensor Window

❷ Power Zoom Control Buttons

❸ Manual Zoom Lever with Macro Button

❹ Tape Running Buttons

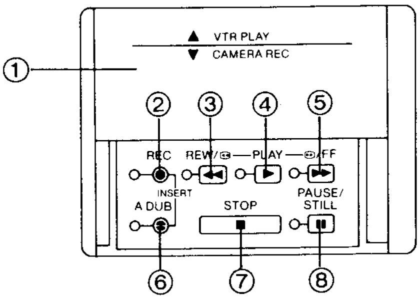

① Camera/VTR Operation Selector Cover

Before starting camera recording, slide this cover close to conceal the Tape Running Buttons and render them inoperative.
For playback, audio dubbing, tape copying and other VTR operations, open this cover. This renders the Start/Stop Button and other operation controls for camera recording inoperative.

② Record Button
③ Rewind/Review Button
④ Play Button
⑤ Fast Forward/Cue Button
⑥ Audio Dubbing Button
⑦ Stop Button
⑧ Pause/Still Button

❺ Lens Cap

❻ Lens Hood

❼ Focus Ring

❽ Zoom Ring

❾ General Operation Controls

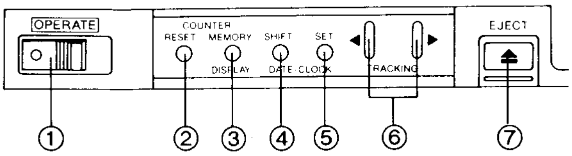

① Operation On/Off Switch
② Reset Button
③ Memory Button
④ Date Shift Button
⑤ Date Set Button
⑥ Tracking Adjust Buttons
⑦ Eject Button

❿ Electronic Viewfinder

⓫ Eyepiece Corrector Control

⓬ Focus Mode Selector

⓭ Back Light Button

⓮ White Balance Mode Selector

⓯ Fade Button

⓰ High Speed Shutter Selector

⓱ Standby Button with Indicator

⓲ Focus Adjusting Button/Zone Selector

⓳ Date/Clock Selector

⓴ Rec Review Button

LEFT VIEW

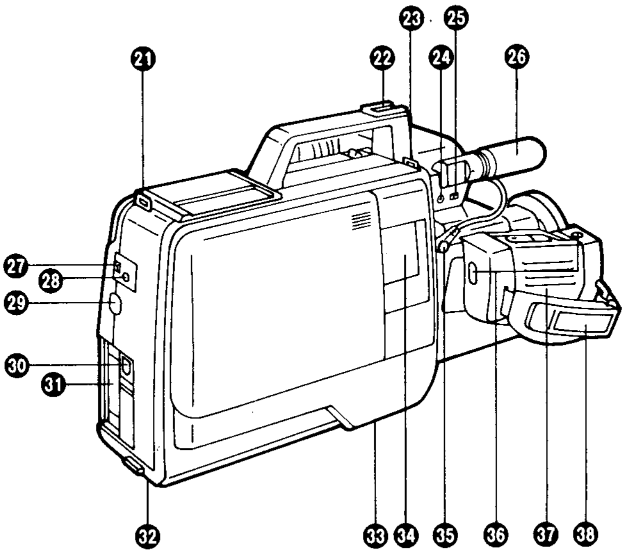

㉑ Metal Fitting for Shoulder Strap

㉒ Accessory Shoe

㉓ Metal Fitting for Shoulder Strap

㉔ External Microphone Socket

㉕ Microphone Sensitivity Selector

㉖ Built-in Microphone

㉗ Edit Switch

㉘ Remote Control Socket

㉙ Adaptor Socket

㉚ Battery Eject Button

㉛ Battery Compartment

㉜ Battery Compartment for Auto Date/Clock

㉝ Tripod Receptacle

㉞ Cassette Compartment

㉟ EVF Terminal

㊱ Start/Stop Button

㊲ Handgrip

㊳ Grip Belt

1-3. VHS MOVIE SYSTEM

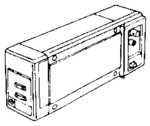 AC Adaptor 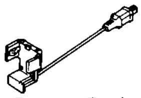 Battery Pack Charging Connector (NV-M7E, B, EG, EO, EN, EA, EM ...Supplied; NV-M7A, AM ...Optional)	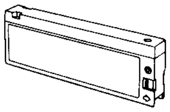 Battery Pack (NV-M7E, B, EG, EO, EN, EA, EM, A ...Supplied; NV-M7AM ...Optional)	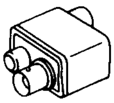 AC Converter Connector (supplied)	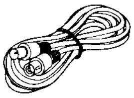 DIN-DIN Coaxial Cable (NV-M7E, B, EG, EO, EN, EA, EM ...Supplied; NV-M7A, AM ...Optional)
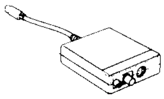 Line Adaptor (VW-KM3) (NV-M7A, EA, EM ...Supplied; NV-M7EO, EN, AM ...Optional)	Batteries for Clock Operation (supplied) 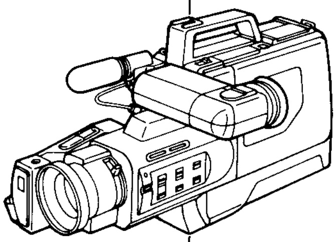	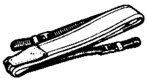 Shoulder Strap (supplied)	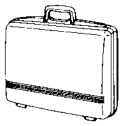 System Carrying Case (NV-M7E, B, EO, A, EA, EM, ...Supplied; NV-M7EN, AM ...Optional)
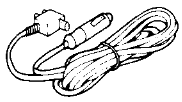 Car Battery Cord (VW-ACM1) (NV-M7A, EA, EM ...Supplied; NV-M7E, B, EG, EO EN, AM ...Optional)	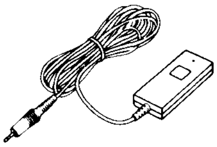 Pause Remote Control Unit (VW-RM1) (NV-M7, A, EA, EM ...Supplied; NV-M7E, B, EG, EO, EN, AM ...Optional)	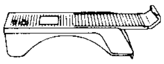 Shoulder Pad (VW-SP7) (optional)	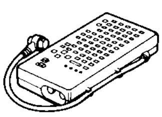 Character Generator (NV-M7B ...Supplied; NV-M7E, EG, EO, EN, A, EA, EM, AM ...Optional)

1-4. EVF INDICATIONS

The following indications are displayed in the Electronic View Finder(EVF) to inform you of the operating conditions of the VHS Movie.

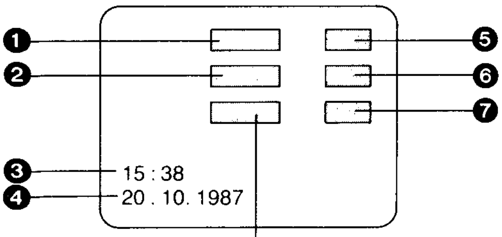

Warning/Alarm Indications

—BATT— There is little battery power left. The VHS Movie will be turned off in a few minutes. Replace the battery pack by a fully recharged one.

—TAPE— It is impossible to record because the erasure prevention tab of the cassette is not intact.

—END— The tape has almost reached its end. Replace the tape with a new one.

—DEW— When condensation has formed inside the VHS Movie, the "DEW" indication will flash and a few seconds later, the unit will turn itself off.

❶ **Remaining Battery Power Indication**

E----F The "▬" indications begin to disappear from right to left as the power of the battery pack weakens.

❷ **Counter Indication**

M0123 Tape Counter
1 2 :34 Lap Time Counter

❸ **Clock Indications**

❹ **Date Indications**

❺ **Recording/Insert Indication**

REC	Recording
---	Recording Pause
INST	Insert
---	Insert Pause

❻ **High Speed Shutter Mode Indication**

1/500	1/500 sec.
1/1000	1/1000 sec.

❼ **Manual White Balance Indication**

OUT	OUTDOOR
IN	INDOOR

- Some of the above indications may light up alternately at the same place in the EVF to indicate the corresponding operating condition or warning.

SECTION 2
ADJUSTMENT PROCEDURES

2-1. DISASSEMBLY PROCEDURES

2-1-1. DISASSEMBLY FLOW CHART

This flow chart indicates disassembly steps for the cabinet parts and the P.C. boards in order to find the items necessary for servicing.
When reassembling perform the steps in the reverse order.

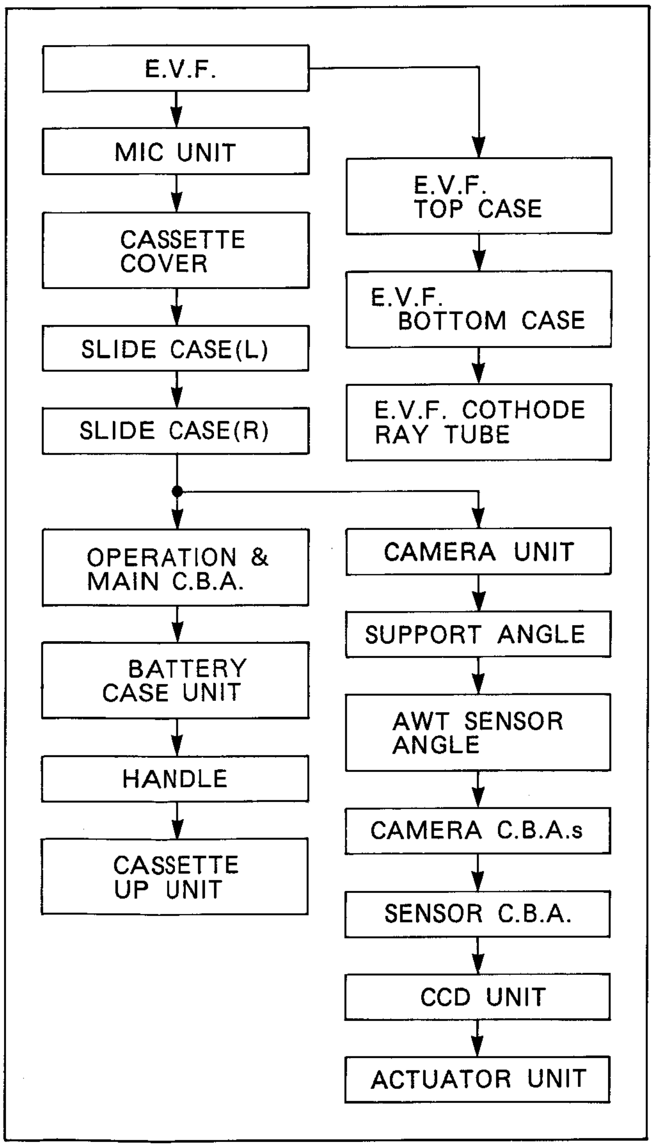

Fig. D1

Note:
(1) When removing the cabinet, work with care so as not to break the locking tabs.
(2) Place a cloth or some other soft material under the P.C. Boards or Unit to prevent damage.
(3) When re-installing, ensure that the connectors are connected and electrical components have not been damaged.
(4) Do not supply power to the Unit during disassembly.

2-1-2. DETAILED DISASSEMBLY METHOD

1. Removal of E.V.F. Unit

(1) Remove the E.V.F. Unit connector.
(2) Slide the E.V.F. Unit in the direction shown by the arrow.
(3) Remove the E.V.F. Unit while pushing on the Locking Lever on the Bottom of the Unit.

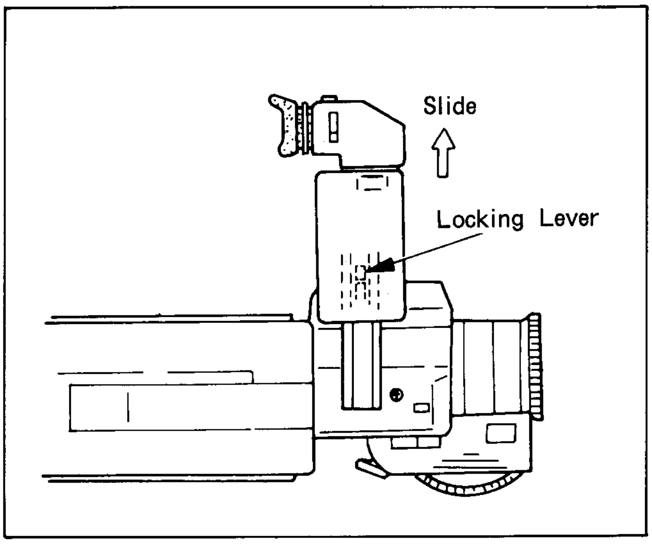

Fig. D2

2. Removal of MIC Unit

(1) Remove 1 Screws (A).
(2) Slide the MIC Unit in the direction shown by the arrow.
(3) Disconnect the connector on the MIC Unit.

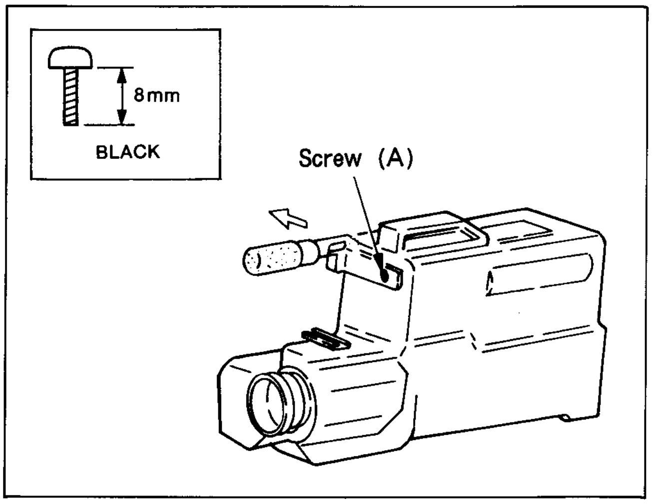

Fig. D3

3. Removal of Cassette Cover

(1) Remove 2 Screws (B).
(2) Pull the cassette Cover straight up to remove.

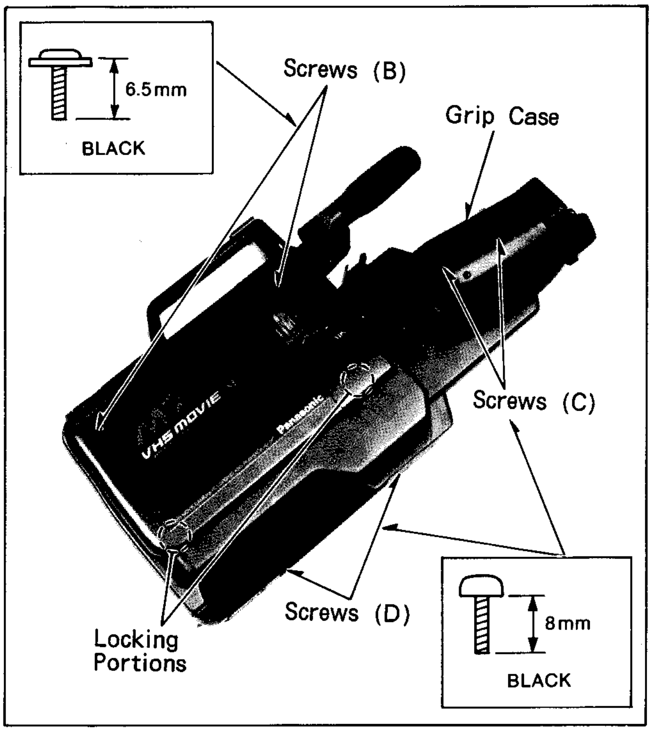

Fig. D4

Note:
Be carefull not to damage the Alignment Tabs, when removing or realigning the Cassette Cover.

4. Removal of Side Case (R) Unit

(1) Remove 4 Screws (E) in Fig.D5.
(2) Lift the Side Case (R) Unit slightly. Then disconnect the connectors on the Side Case (R) Unit.

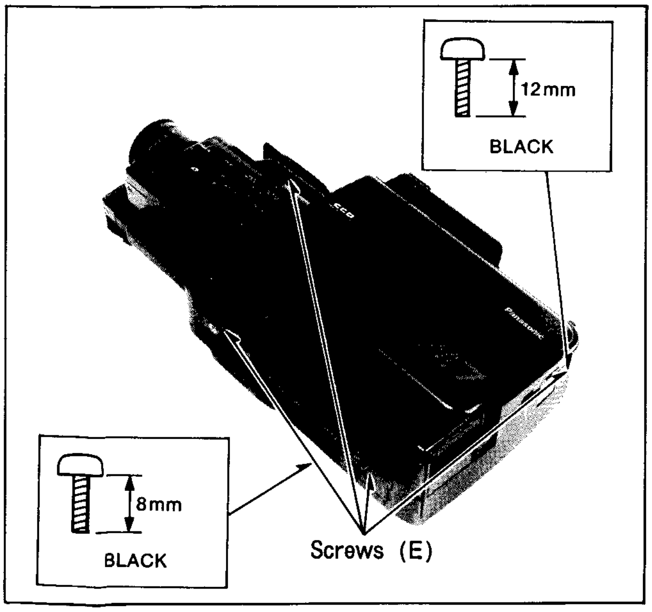

Fig. D5

5. Removal of Side Case (L) Unit

(1) Remove 2 Screws (C) shown in Fig.D4.
(2) Remove 2 Screws (D) shown in Fig.D4.
(3) Remove the lens hood and remove screw (F) shown in Fig. D6.

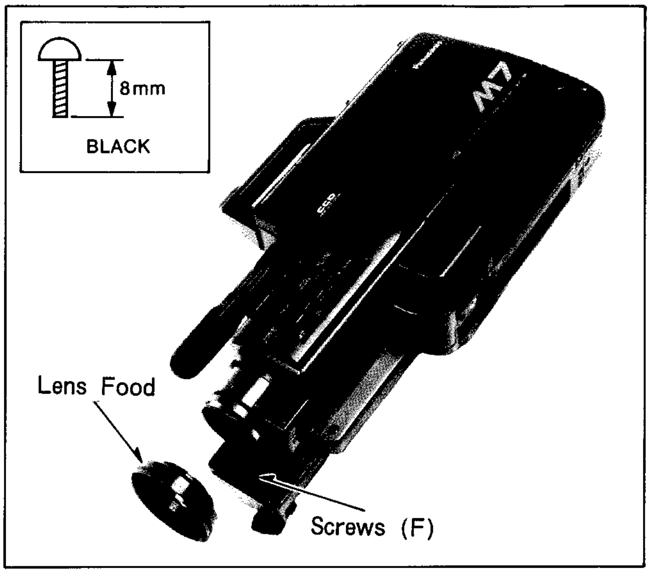

Fig. D6

(4) Lift the Side Case (L) Unit slightly. Then disconnect the connectors on the Side Case (L) Unit.

6. Removal of Operation Panel Unit

(1) Unlock 2 locking Tabs (H).
(2) Lift the operation panel unit up slightly.

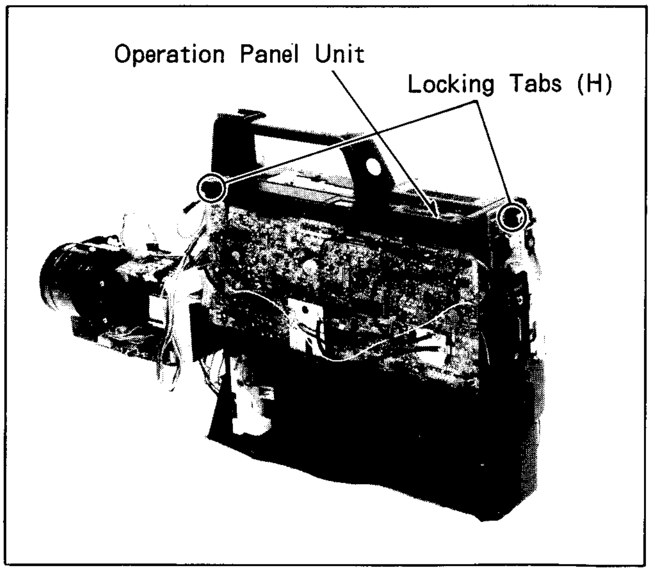

Fig. D7

7. Opening of Operation C.B.A.

(1) Remove 2 screws (I).
(2) Disconnect P1 on operation C.B.A.
(3) Unsnap 2 locking Tabs (J).
(4) Open Operation/Main C.B.A.

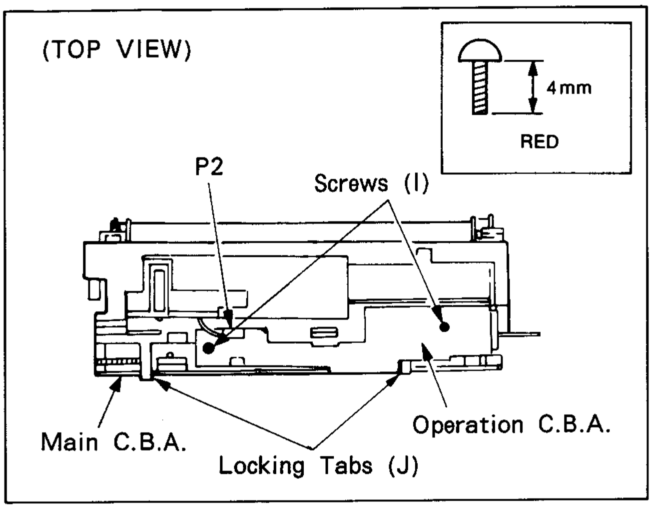

Fig. D8

8. Opening of Battery Case Unit

(1) Open Main/Operation C.B.A. as shown in Fig.D9.
(2) Remove 3 screws (K). Then lift the Battery Compartment slightly in order to release it from the locking pin.
(3) Loosen wires located around the Battery Compartment.

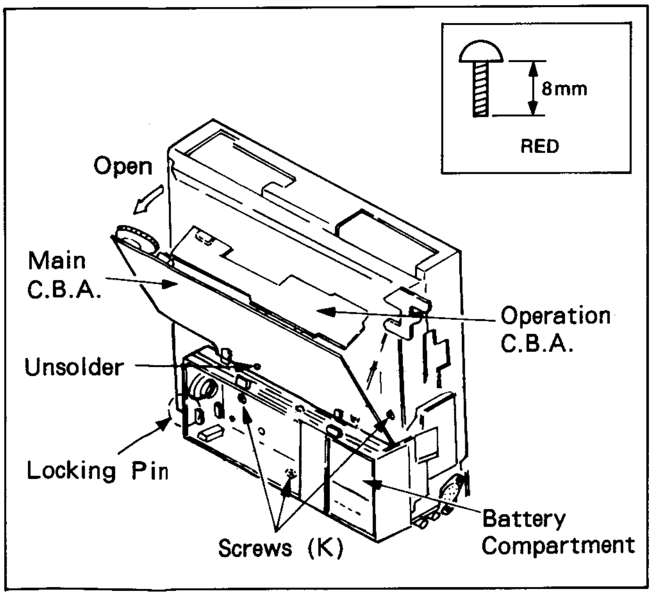

Fig. D9

9. Removal of Handle Unit

(1) Slightly loosen 4 screws (L).
(2) Remove the Handle unit.

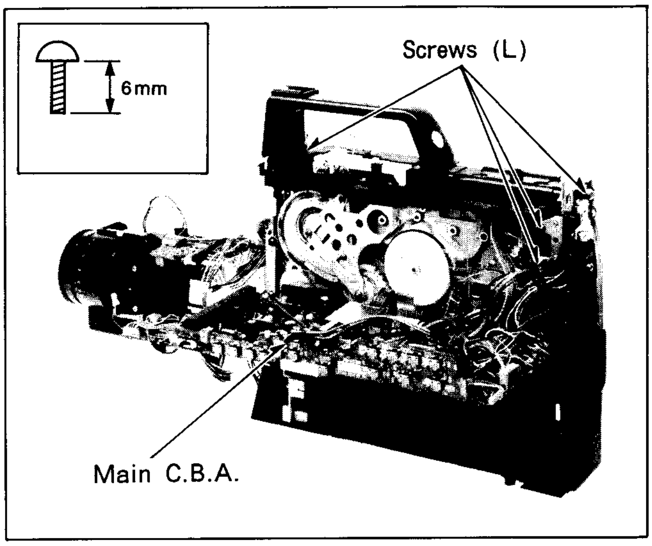

Fig. D10

10. Removal of Cassette Compartment

(1) Remove 4 screws (M).
(2) Remove the cassette up unit.

Note:
When reinstalling the cassette up unit, install it in the closed (cassette down) condition.

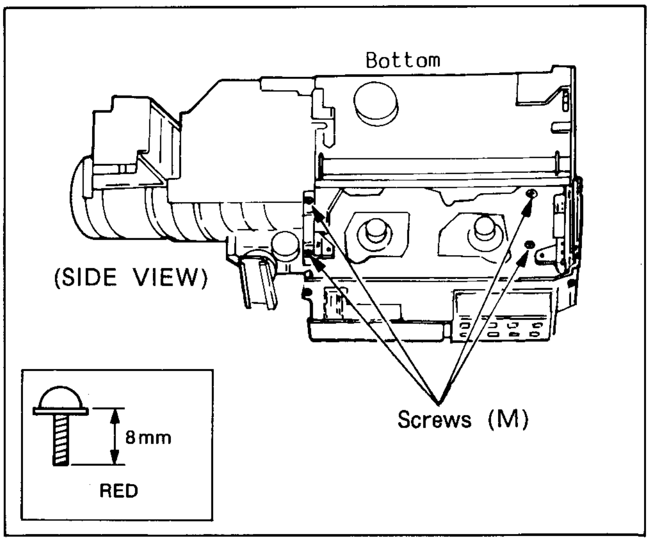

Fig. D11

11. Removal of Camera Unit

(1) Remove 2 screws (N).
(2) Disconnect connector P3004 and flexible connector P3003 on Main C.B.A.

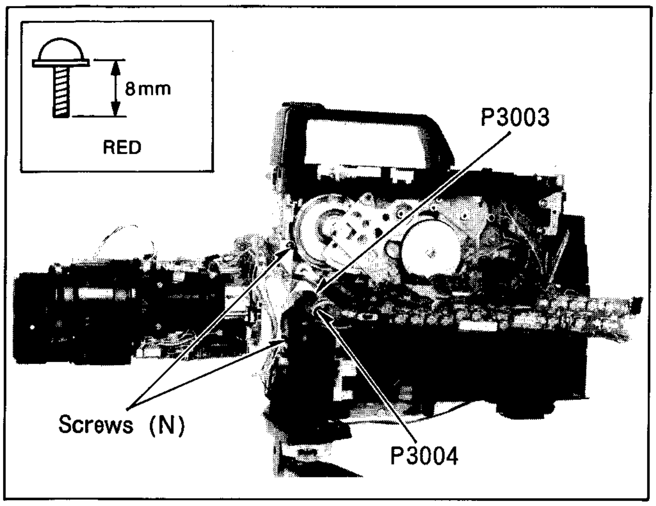

Fig. D12

12. Removal of Support Angle

(1) Remove 2 screws (O).
(2) Remove Support Angle.

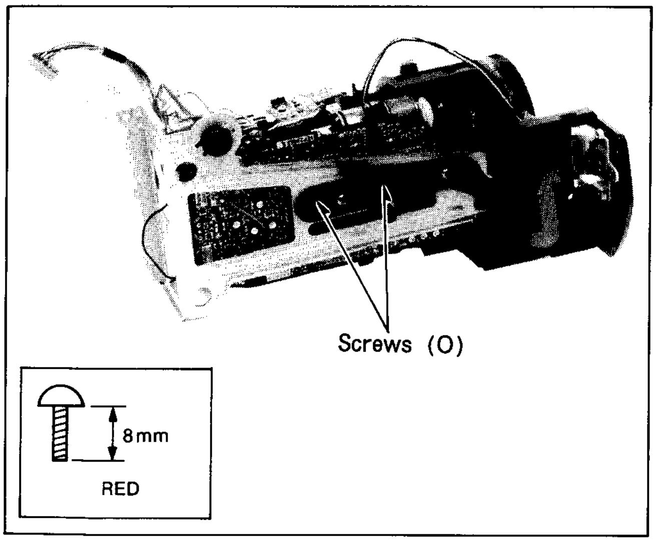

Fig. D13

13. Removal of AWT Sensor Support Angle

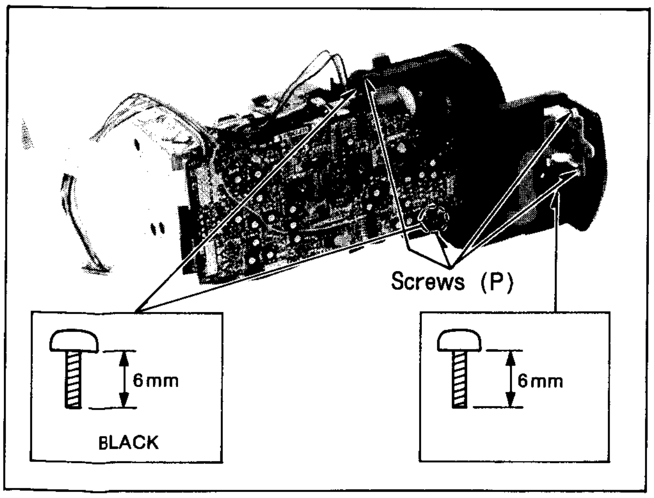

Fig. D14

(1) Remove 3 screws (P).
(2) Remove AWT Sensor Support Angle.

14. Removal of Camera C.B.A.

(1) Remove 6 screws (Q) on Auto Focus and Process C.B.A's.
(2) Disconnect Connectors B3202 and B301 on process C.B.A.
(3) Remove Auto Focus and Process C.B.A.

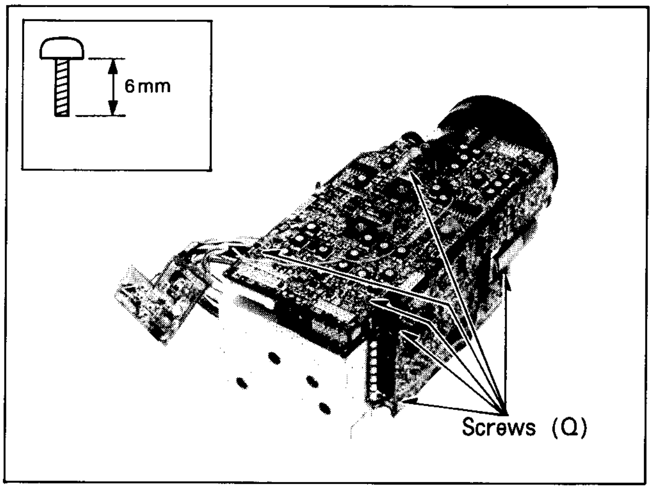

Fig. D15

15. Removal of Sensor C.B.A.

(1) Remove the 3 screws (R).
(2) Remove Shield Case.

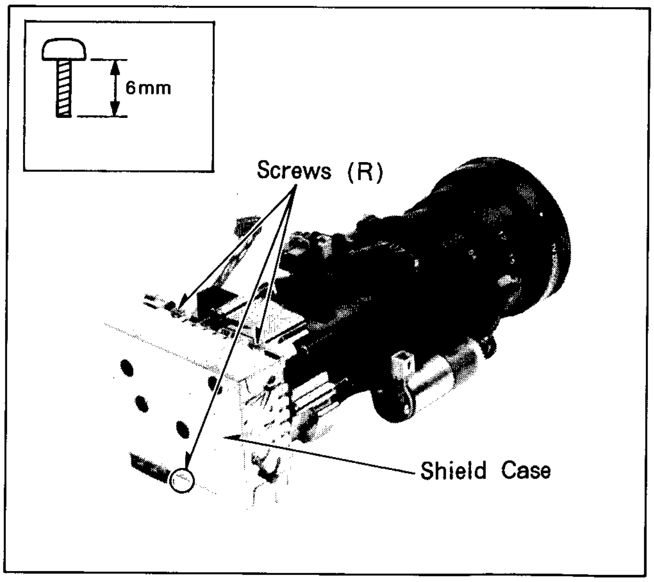

Fig. D16

(3) Remove 2 screws (S) on sensor C.B.A.
(4) Remove Sensor C.B.A. then remove flexible wire FP201. on Sensor C.B.A.

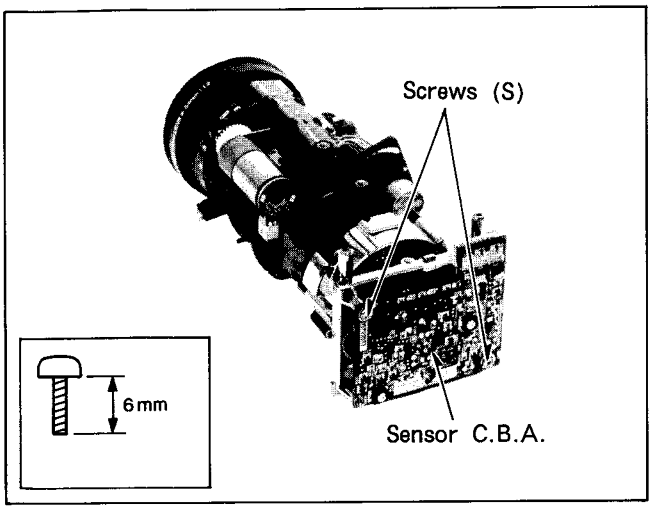

Fig. D17

16. Removal of CCD Unit

(1) Remove 2 screws (T) then take out the Shield Case.
(2) Remove 3 screws (U) then take out the Shield Case.
(3) Remove 2 screws (V) then take out the CCD Unit.

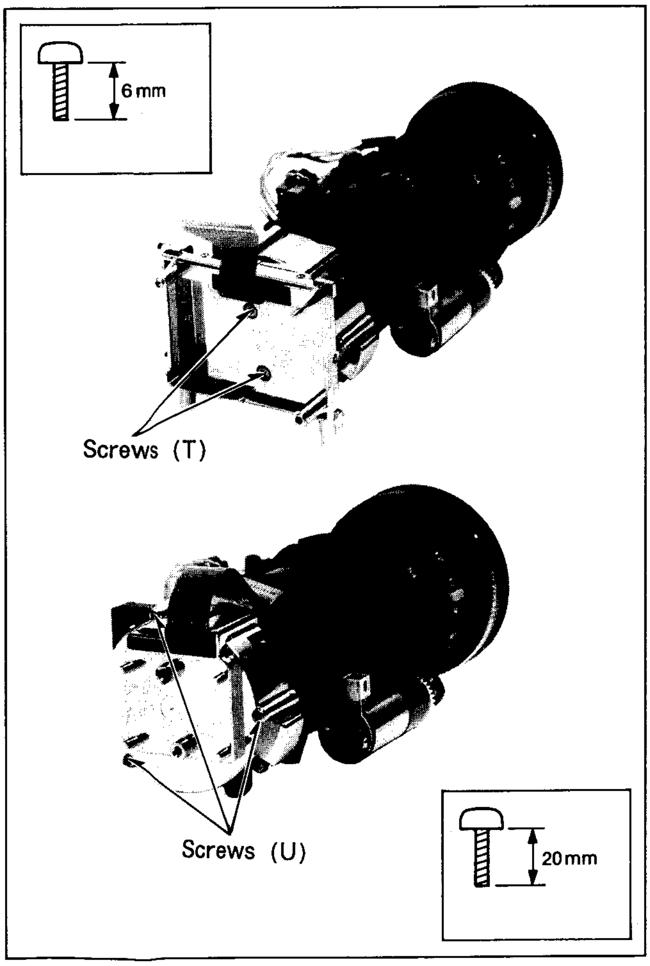

Fig. D18

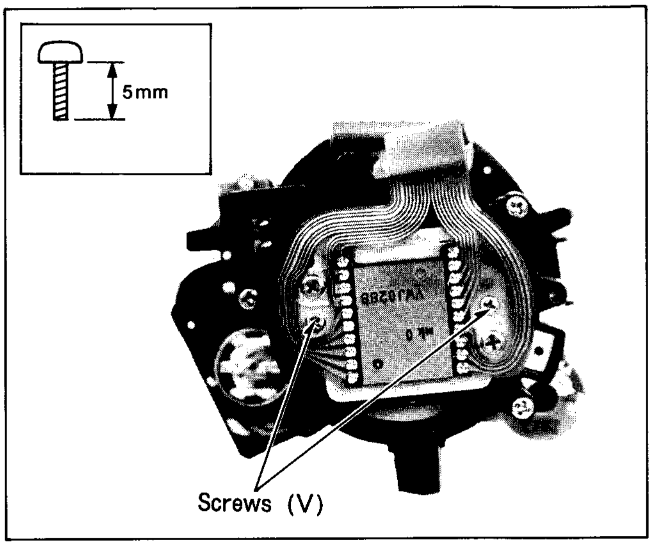

Fig. D19

17. Removal of Actuator Unit

(1) Remove 3 screws (W) and remove actuator unit.

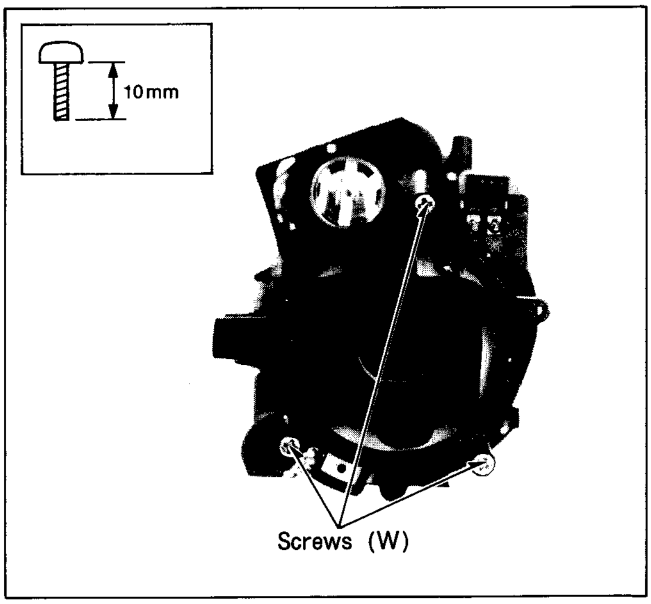

Fig. D20

18. Disassembly of E.V.F. Unit

(1) Remove 2 Screws (A) on the bottom of the E.V.F. Unit and then remove the Bottom Case.
(2) Remove CRT Case–B from CRT Case–A as shown in Fig. D21.
(3) Lift the CRT Assembly up as shown in Fig. D22 to remove it from the CRT Case–A.
(4) Rotate Nut (B) and then pull DY Assembly in the direction shown in Fig. D23 to remove it. Then the CRT can be replaced.
(5) For reinstallation, reverse the above steps.

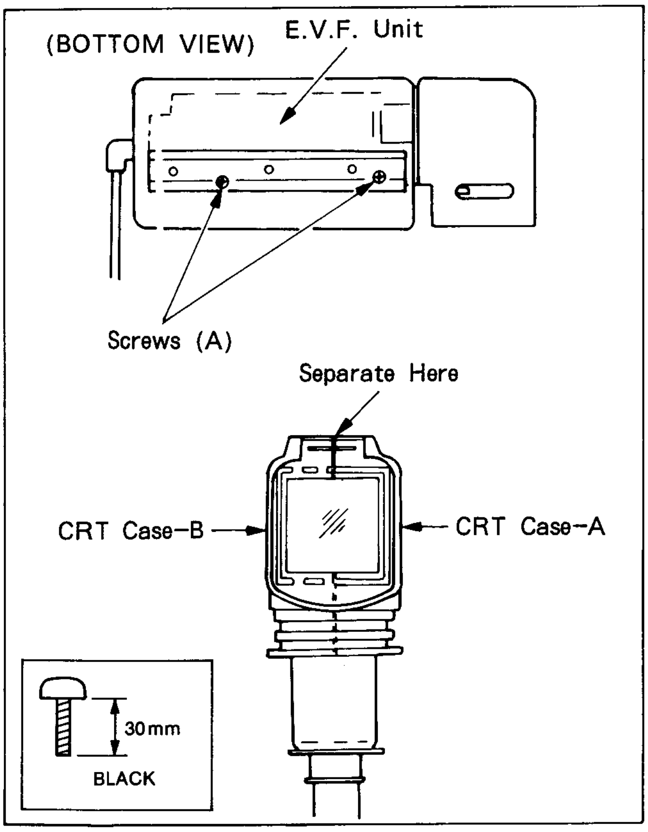

Fig. D21

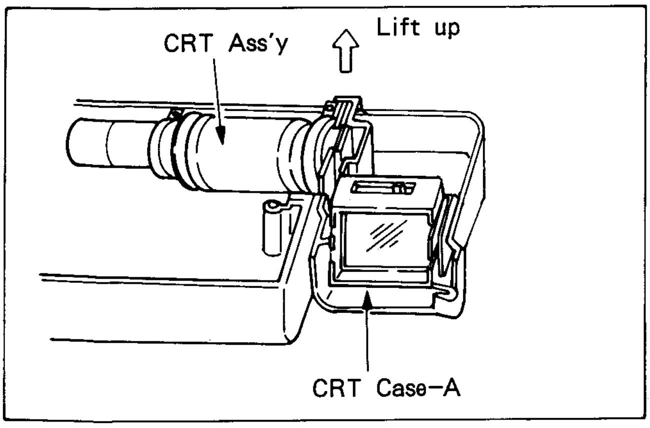

Fig. D22

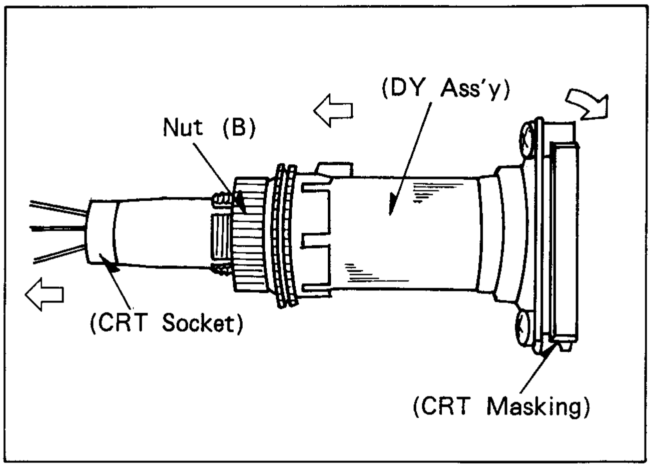

Fig. D23

2-2. REPLACEMENT PROCEDURES

2-2-1. Replacement of CCD Unit

(1) After removing of the CCD unit, install the new CCD unit.
(2) Assemble the unit subject to the reverse steps of disassembly procedures.

NOTE:
(1) Do not touch the sureface of CCD unit.
(2) Confirm the whole adjustment procedures for Camera section after replacing this CCD unit.

2-2-2. Replacement of Zoom Motor Unit

(1) Remove 2 screws (C) and remove Zoom Motor Unit.
(2) Install the new Zoom Motor Unit.
Prior to this replacement, no dust around the Zoom Motor, especially around the gear unit should be confirmed.

2-2-3. Replacement of Focus Motor Unit

(1) Remove the 2 screws (D) and remove the Focus Motor Unit.
(2) Install the new Focus Motor Unit.
Prior to this replacement, no dust around the Focus Motor Unit, especially around the gear should be confirmed.
(3) After this replacement, all the correct adjustments for all parts of auto–focus should be comfirmed.

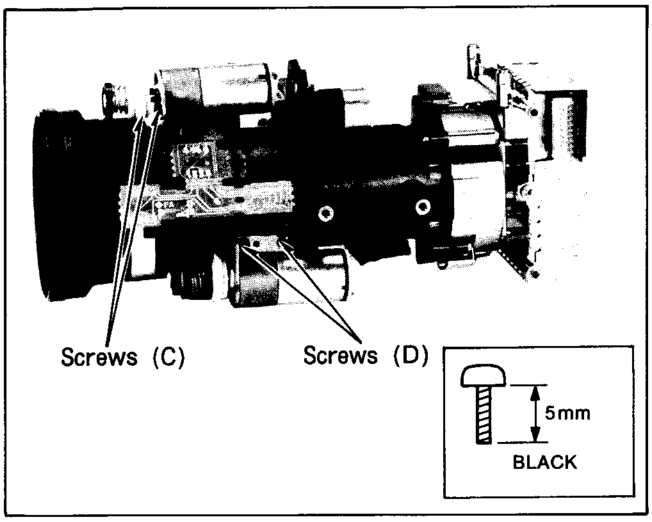

Fig. R1

2-2-4. Replacement of DD Cylinder Unit

Work with extreme care when removing or replacing the DD cylinder unit.
Do not touch video heads during servicing.

(1) Remove the screw (E) to take the Earth Holder Unit out.

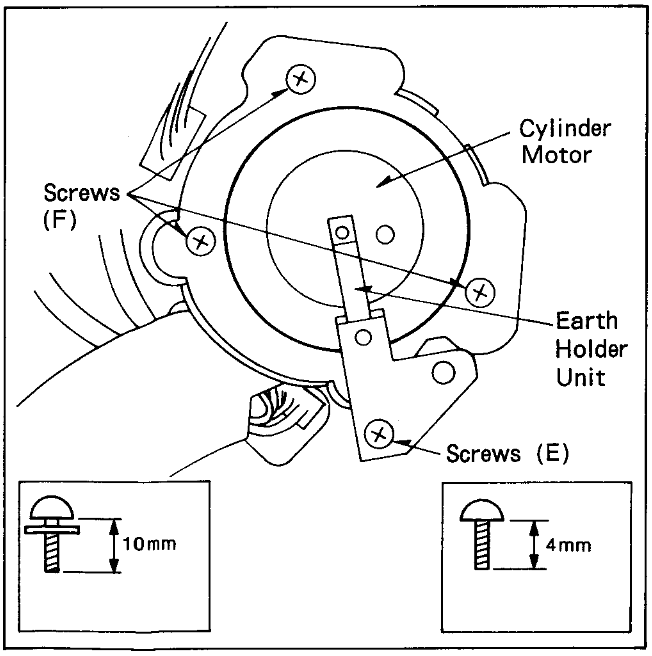

Fig. R2

(2) Remove the 3 screws (F) to take DD cylinder unit out.

NOTE :
Since there is very little clearance between DD cylinder unit and chassis,handle with care.

(3) Reinstall the new DD cylinder unit, tighten the 3 screws (F).

2-2-5. Replacement of Uppper Cylinder Unit

Be sure to observe the following procedures when replacing Upper Cylinder Unit.

(1) REMOVING THE UPPER CYLINDER UNIT

a. Remove the 2 screws as shown in Fig.R3.
b. Unsold the 10 soldered portions indicated by arrows on Circuit Board.
c. Remove the Upper Cylinder Unit by lifting it upwards.

NOTE:
Soldered portion can be easily removed by using solder sucking wire, etc.

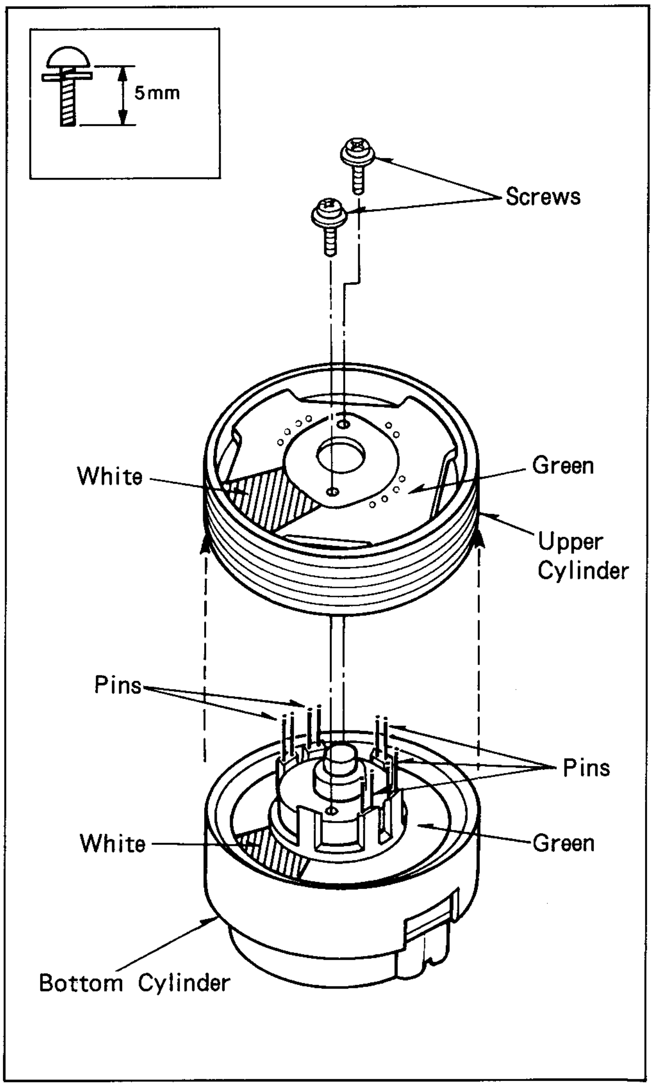

Fig. R3

(2) REINSTALLING THE UPPER CYLINDER UNIT

The Upper Cylinder Unit can be reinstalled by reversing the removal procedure. However, when reinstalling, it must be extremely careful so that both the white and green portions of the Circuit Board on the Upper Cylinder Unit will correctly match the white and green portions of the Circuit Board on Bottom Cylinder as shown in Fig.R4.

NOTE:
If the Upper Cylinder Unit is reversely installed, no colour will appear when playing back a pre-recorded tape.

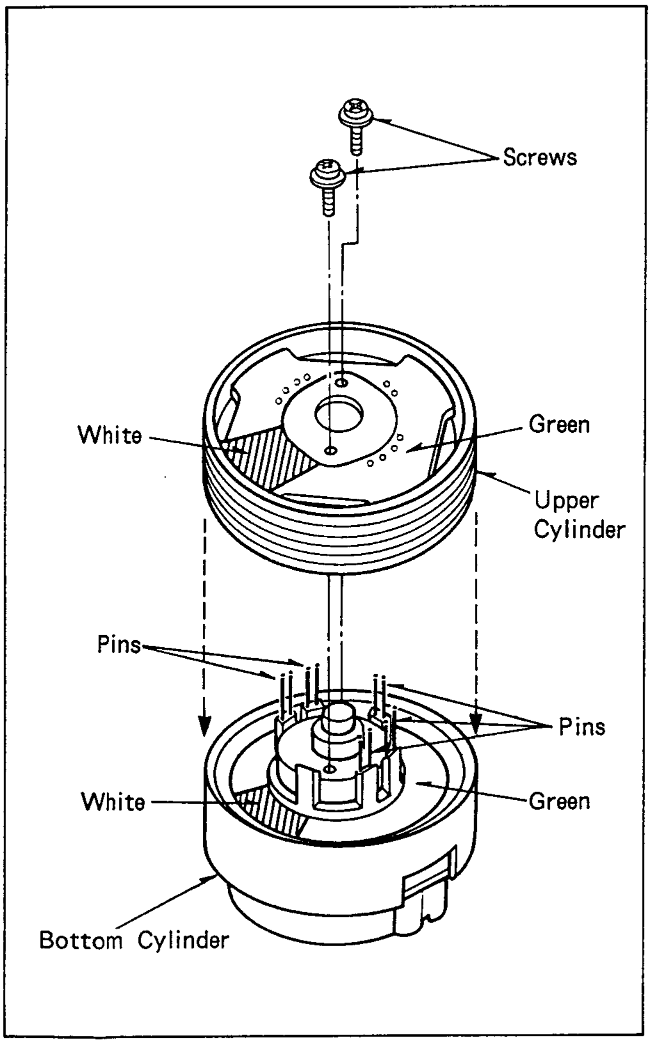

Fig. R4

2-3. MECHANICAL ADJUSTMENT PROCEDURES

The mechanical adjustment procedures of NV-M7 is the same as NV-M3's one, refer to service manual NV-M3 (order NO.VRD8508135, VRD8509136), except following confirmation and adjustment.

2-3-1. CONFIRMATION OF BRAKE TORQUE
2-3-2. BACK TENSION ADJUSTMENT
2-3-3. CONFIRMATION OF A/C HEAD HEIGHT

2-3-1. Confirmation of Brake Torque

* Equipment Required:
  Dial Torque Gauge
  Adaptor for Gauge
* Specification: ------ see spec, table (Fig. M2)

(1) Remove the cassette compartment by unscrewing 4 screws.
(2) Attach the adaptor to the torque gauge and place the unit in STOP mode.
(3) Place the torque on the reel table.

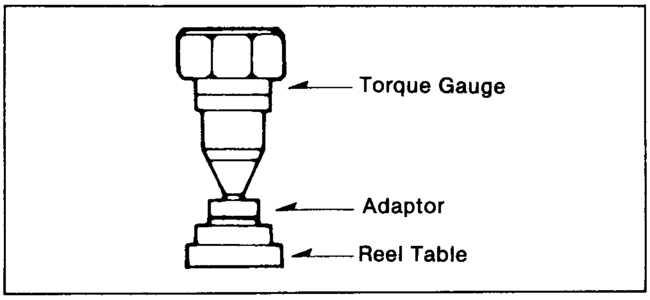

Fig. M1

(4) Turn torque gauge in either direction indicated in the Fig. M2, and read the gauge when the brake begins slipping.

Note:
If proper brake torque can not be optained, check the both take-up and supply clutch gear.

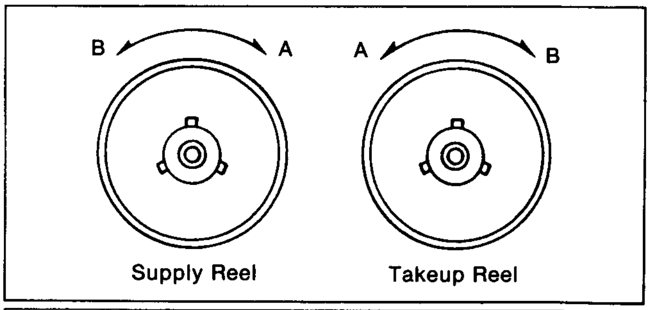

	A	B
Takeup	28+-8g-cm	28+-8g-cm
Supply	28+-8g-cm	28+-8g-cm

Fig. M2

2-3-2. Back Tension Adjustment

* Equipment Required:
  Back Tension Meter
  VHS Cassette Tape
* Specification: ------ 19 ~ 23g

1. Playback the cassette tape from the beginning and wait until the tape movement get the stabilization. (for approx. 10~20 seconds)
2. Insert the Back Tension Meter into the path of a tape, and measure the back tension to be within specification as shown in Fig. M3.

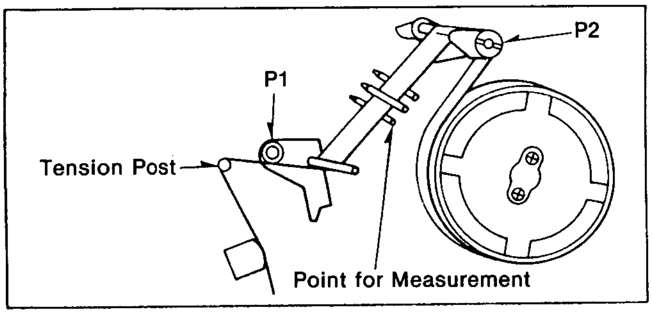

Fig. M3 Measurement of Back Tension

Note:
1. While measuring, make sure that the three probes of the meter are all in good contact with the tape.
2. As the tension meter is very sensitive, we recommend taking 3 separate readings.
3. If it is out of specification, change the spring notch as shown in Fig. M5.

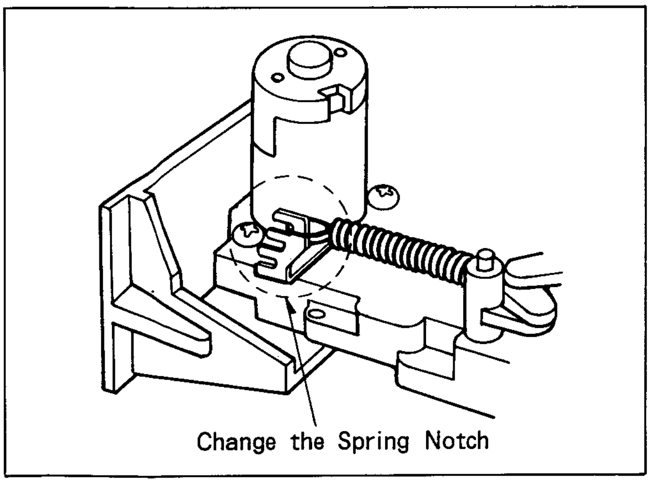

Fig. M4

2-3-3. Confirmation of A/C Head Height

Note:
Unless the A/C Head is replaced, this procedure should not be performed.

(1) Looking at the lower edge of the control head within the tape running, ensure that lower edge of the tape runs along 0.25mm far from lower edge of the control head. (litte bit up position from lower edge of control head.) If it doesn't, slightly turn the nut (A) in either direction to correct clockwise to lower the head and counterclockwise to raise it.

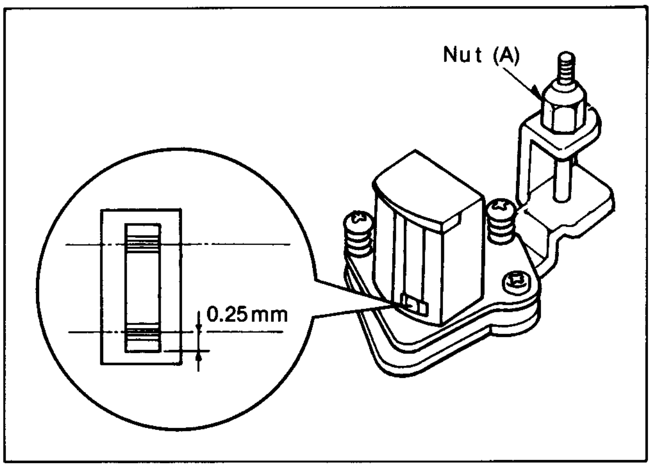

Fig. M5

2-4. ELECTRICAL ADJUSTMENT PROCEDURES

2-4-1. ELECTRICAL ADJUSTMENT FOR CAMERA SECTION

TEST EQUIPMENT AND TOOLS

The following equipment is required for adjustment of the CAMERA section of VHS Movie.

1. Oscilloscope
   Dual Trace, 25MHz, 2mV/DIV,
   10:1 Probe
   1:1 Probe
2. Digital Volt Meter or VTVM
3. Frequency Counter
4. Vectorscope
5. Light Meter
6. Tripod
7. Colour Video Monitor
8. Lighting
   140 footcandles (1400lux), on the chart surface 3200 degrees K.
9. Reflection Chart
   *Logarithmic Gray Scale Chart
   (Part No.:YWV2310RB99)
   *Colour Chip Chart
   (Part No.:YWV2100RB98)
   *Ball Chart
   (Part No.:YWV2100RB03)
   *Hunting Chart
   (Included in this Service Manual)
   *White Chart (Card)
   (The white paper is available as a white chart)
   *J Chart
   (Part No.:YWV2100RB3)
   *B/W Chart
   (Included in this Service Manual)
   *Gray−White Chart
   (Included in this Service Manual)
10. Plastic Tip Driver
11. Camera Unit Holder
   (Part No.:VFK0382)
12. Camera Holder Arm
   (Part No.:VFK0431)

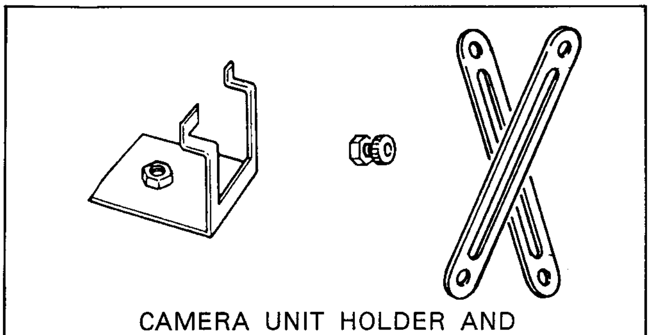

Fig. C1

13. Color temperature conversion filter
   *C12 Filter
   (Part No.:VFK0374)
   *C2 Filter
   (Part No.:VFK0375)
14. Camera Extension Cables
   (Part No.:VFKS0060, VFK0380, VFK0430)

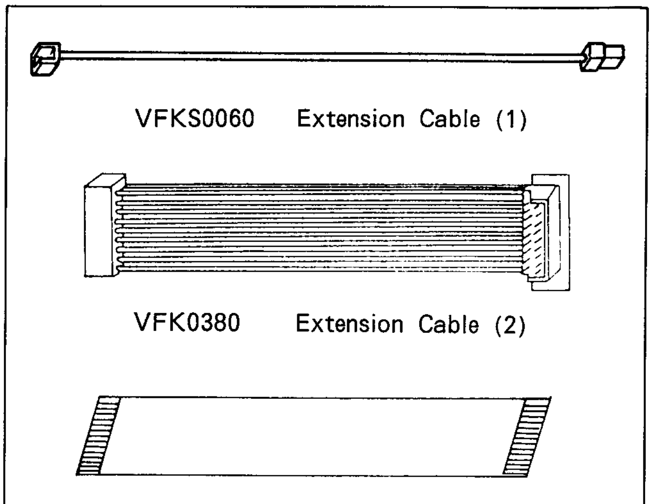

Fig. C2

PREPARATION

1) Remove the Side Case (L) and Side Case (R) from the Unit.
   (Refer to the Disassembly Section.)
2) Mount the Camera Unit on the tripod using the Camera Unit Holder (VFK0382) and Camera Holder Arm (VFK0431).
3) Connect the Camera Unit, Video Recorder Unit, AC Adaptor, Camera Operation Unit and Colour Monitor TV as shown in Fig. C3.
4) Remove the Flexible Cable between FP301 and P3003
   And re−connect the Camera Extension Cable (3) (VFK0430) to these connectors.

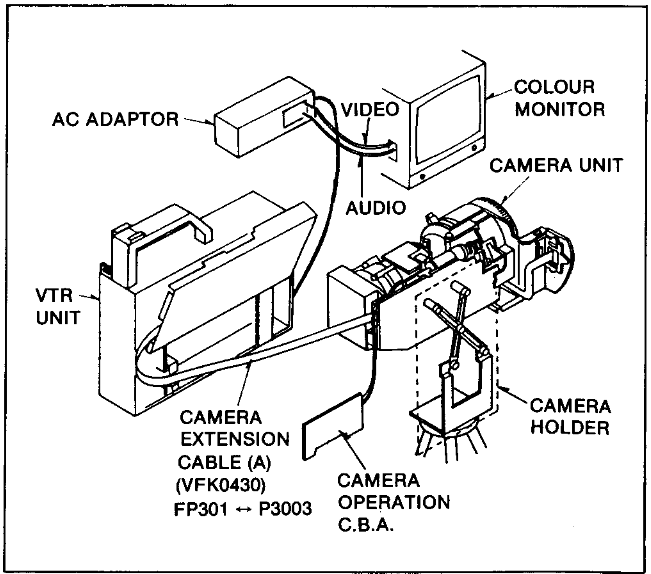

Fig. C3

Note:
1. Set the White Balance Switch to INDOOR position during adjustment procedures.
2. Service work for the Camera Unit must be performed in a dust-free location to maintain lens cleanliness.
3. To achieve the best adjustment results, warm up the camera before adjusting.
4. FOR TRIGGER (Refer to Fig. C4)
   To trigger the scope, solder jumper wires to the following pins that are used as test points. (H-Rate - Pin 12 of B302 and V-Rate - Pin 13 of B302). Remove the jumper wires after completing the adjustment Procedure(s).
5. If you use the reflection chart, ensure the colour temperature of the light source used is 3200 degrees K.

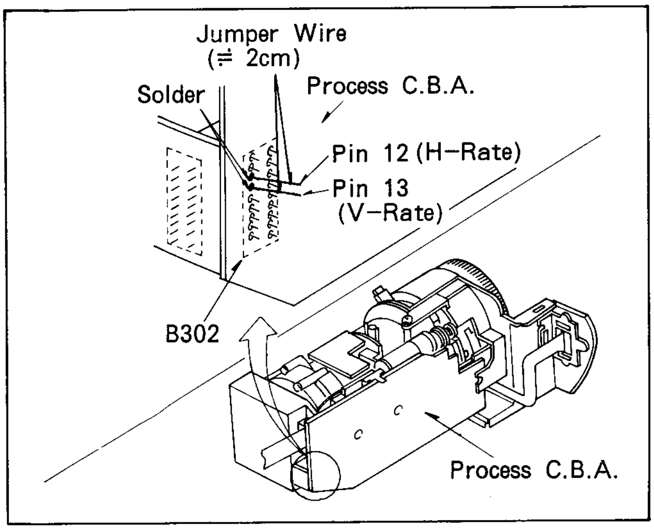

Fig. C4

HOW TO READ THE ADJUSTMENT PROCEDURES

Connecting Point (Test Point) of Measuring Equipment → TP
Adjustment Component → ADJ.
Lens Cap Yes or No → LENS CAP
Camera Target Chart → CHART

TP	ADJ.	LENS CAP	CHART
TP1	VR604	YES	WHITE CHART

M. EQ.	SPEC.
OSCILOSCOPE	SIGNAL CLIP 1.48V +- 0.04Vp-p

M. EQ. ← Measuring Equipment
SPEC. ← Specification for Adjustment or Adjusting Method

Fig. C5-1

CCD DRIVE SECTION

1. BACK FOCUS ADJUSTMENT
   ↓
2. PLL FREQUENCY ADJUSTMENT
   ↓
3. V-SUB ADJUSTMENT
   ↓
4. CCD OUTPUT ADJUSTMENT

PROCESS SECTION

5. PEDESTAL LEVEL ADJUSTMENT
   ↓
6. ALC ADJUSTMENT
   ↓
7. AGC ADJUSTMENT
   ↓
8. YH LEVEL ADJUSTMENT
   ↓
9. WHITE BALANCE ADJUSTMENT
   ↓
10. CARRIER BALANCE AND BLACK PEDESTAL ADJUSTMENT
   ↓
11. AUTO WHITE BALANCE MODE ADJUSTMENT
   ↓
11-1. AWB AUTO MODE (OUTDOOR) ADJUSTMENT
   ↓
11-2. AWB AUTO MODE (OFFSET) ADJUSTMENT
   ↓
12. COLOUR PHASE AND R-Y/B-Y GAIN ADJUSTMENT
   ↓
13. HIGH INTENSITY SUPPRESS ADJUSTMENT
   ↓
14. LOW LIGHT INDICATION ADJUSTMENT
   ↓
15. AWT MODE ADJUSTMENT
   ↓
15-1. AWT MODE (OFFSET) ADJUSTMENT
   ↓
15-2. AWT MODE (GAIN) ADJUSTMENT
   ↓
15-3. HIGH COLOUR TEMPERATURE ADJUSTMENT

AUTO FOCUS SECTION

16. AF GATE ADJUSTMENT

↓

17. BIMOLF GAIN CONTROL ADJUSTMENT

↓

18. AF AMP BIAS GAIN ADJUSTMENT

↓

19. AF VH FREQUENCY ADJUSTMENT

Fig. C5-2

CCD DRIVE SECTION

1. BACK FOCUS ADJUSTMENT

(1) Aim. the Camera at the Hunting Chart in 3m distance and zoom all the way in (Fully tele position).
(2) Focus the lens on the object.
(3) Adjust the relay lens adjustment point as shown in Fig. C6.

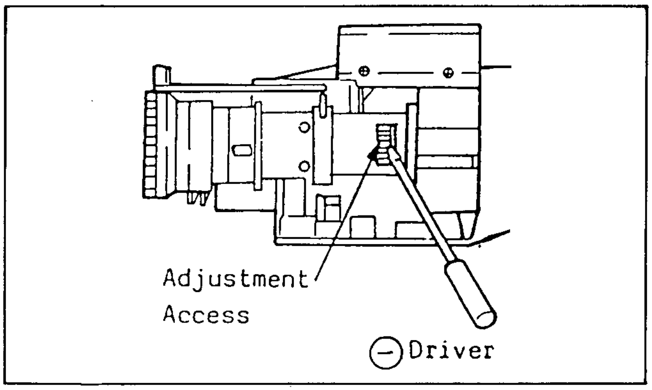

Fig. C6

(4) Zoom all the way back and adjust the back focus pitch so that the sharpest focus is obtained.
(5) Repeat the procedure as follows, zoom in, focus, zoom out and adjust until the best focus is obtained over the entire Zoom range.

2. PLL FREQUENCY ADJUSTMENT

(1) Remove the Sensor Shield Case by removing its 4 Screws.

TP	ADJ.	LENS CAP	CHART
PIN 10 OF B201	C206		
M. EQ.		**SPEC.**	
FREQUENCY COUNTER		9.65625MHz +- 10Hz	

Note:
B201, C206 : CCD Drive C.B.A.

3. V-SUB ADJUSTMENT

TP	ADJ.	LENS CAP	CHART
	VR201	NO	HALOGEN LAMP
M. EQ.		**SPEC.**	
MONITOR TV		NO BLOOMING	

(1) Zoom allthe way in (Fully teie position) and aim the camera at the Halogen Lamp (3200 degrees K) as shown in Fig. C7-1.

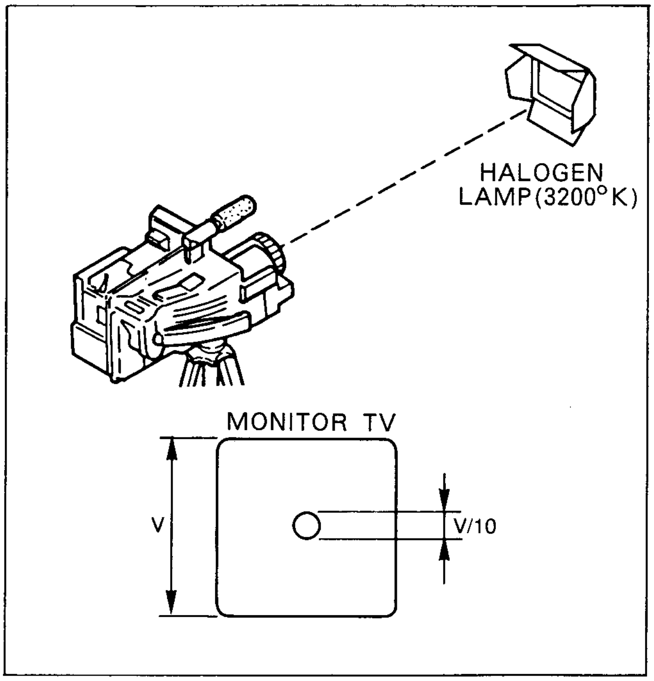

Fig. C7-1

(2) Set the High Speed Shutter SW to "ON" portion.
(3) Connect a jumper wire between TP10 and TP11 to fully open the iris.
(4) Adjust the Blooming Control (VR201) so that the monitored picture does not contain the Blooming.
(5) High Speed Shutter "ON" and "OFF" both mode, confirm that the monitored picture does not contain the Blooming even if the camera moves as shown in Fig. C7-2.

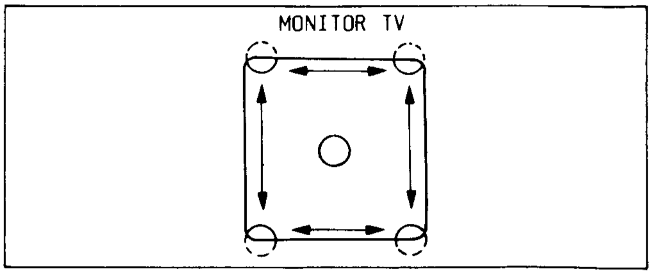

Fig. C7-2

4. CCD OUTPUT ADJUSTMENT

TP	ADJ.	LENS CAP	CHART
TP201	VR202	NO	J CHART
M. EQ.		SPEC.	
OSCILLOSCOPE		200mV +- 10mV	

Note1:
TP201, VR202 : CCD Drive C.B.A.

Note2:
Prior to the above adjustment, adjust the iris control (VR301) so that the level at TP1 is 300+-10mV by observing waveform on the oscilloscope.

(1) Aim the camera at the J chart and focus the lens on the object.
(2) Connect the oscilloscope to TP201.
(3) Adjust VR202 so that the signal level is 200+-10mVp-p as shown in Fig. C8.

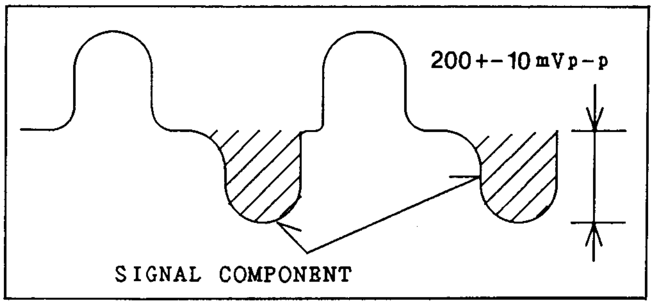

Fig. C8

PROCESS SECTION

5. PEDESTAL LEVEL ADJUSTMENT

TP	ADJ.	LENS CAP	CHART
TP2	VR305	YES	
M. EQ.		SPEC.	
OSCILLOSCOPE		SIGNAL LEVEL EQUALS THE BLANKING (BLNK) LEVEL.	

Note:
TP2, VR305 : Process C.B.A.

(1) Cover the Camera Lens with the Lens Cap.
(2) Connect the scope to TP2 and trigger with Pin 12 of B302 (H-Rate).
(3) Adjust the Pedestal Level Control (VR305) so that the signal level equals the BLK level as shown in Fig. C9.

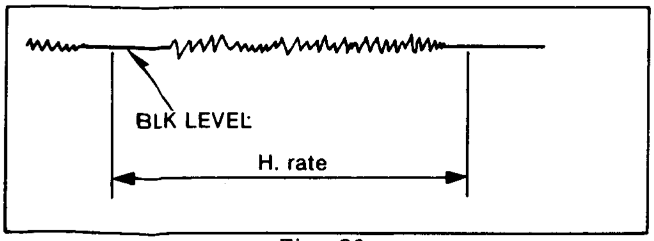

Fig. C9

6. ALC ADJUSTMENT

TP	ADJ.	LENS CAP	CHART
TP1	VR301	NO	GRAY SCALE CHART
M. EQ.		SPEC.	
OSCILLOSCOPE		0.30V +- 0.02Vp-p	

Note:
TP1, VR301 : Process C.B.A.

(1) Aim the camera at the gray scale chart.
(2) Connect the scope to TP1 and trigger with Pin 12 of B302 (H-Rate).
(3) Adjust the Camera Unit to obtain 40usec as shown in Fig. C9.
(4) Adjust the Auto Iris Control (VR301) so that the signal level is 0.30V +- 0.02Vp-p.

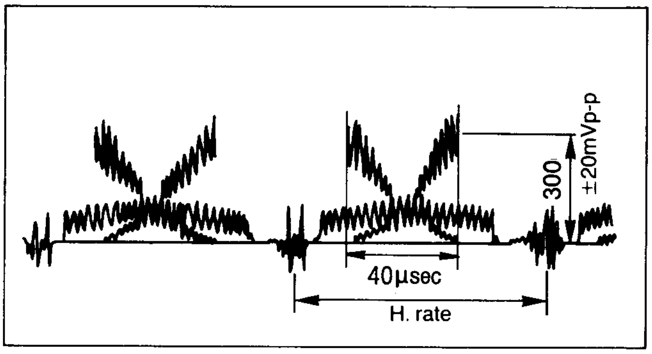

Fig. C10

7. AGC ADJUSTMENT

TP	ADJ.	LENS CAP	CHART
TP2	VR304	NO	GRAY SCALE CHART
M. EQ.		SPEC.	
OSCILLOSCOPE		0.30V +- 0.02Vp-p	

Note:
TP2, VR304 : Process C.B.A.

(1) Aim the camera at the gray scale chart.
(2) Connect the scope to TP2 and trigger with Pin 12 of B302 (H-Rate).
(3) Adjust the Camera Unit to obtain 40usec as shown in Fig. C11.
(4) Adjust the AGC Control (VR304) so that the signal level is 0.30V +- 0.02Vp-p.

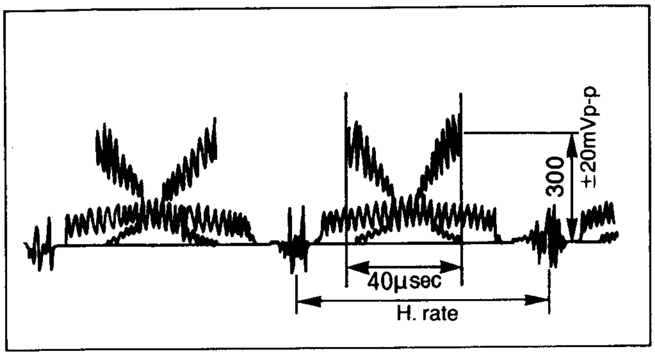

Fig. C11

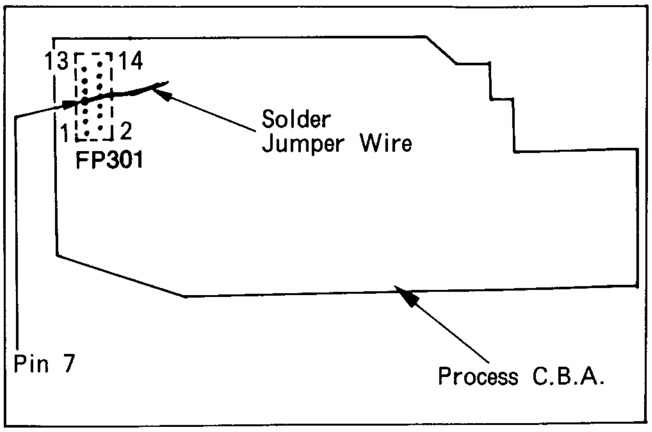

Fig. C13

8. YH LEVEL ADJUSTMENT

TP	ADJ.	LENS CAP	CHART
PIN 7 OF FP 301	VR302	NO	GRAY SCALE CHART
M. EQ.	**SPEC.**		
OSCILLOSCOPE	B/A = 2.33 +− 0.2		

Note:
VR302, FP301 : Process C.B.A.

(1) Aim the camera at the gray scale chart.
(2) Connect the scope to Pin 7 of FP301 (Refer to Fig. C13).
(4) Adjust the YH Level Control (VR302) so that the signal level "B/A" is 2.33 +− 0.2 as shown in Fig. C12.
(5) Disconnect the jumper wire between TP4, TP5 and TP6.

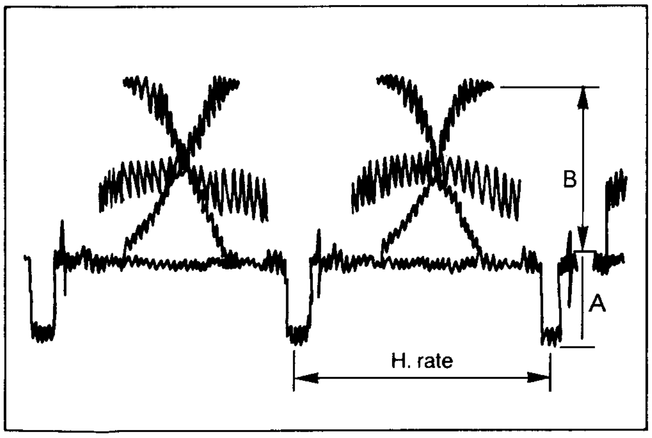

Fig. C12

9. INDOOR WHITE BALANCE ADJUSTMENT

TP	ADJ.	LENS CAP	CHART
VIDEO OUTPUT	VR322, VR323	NO	WHITE CHART
M. EQ.	**SPEC.**		
VECTORSCOPE	CENTER OF VECTORSCOPE		
OSCILLOSCOPE	WAVEFORM IS MINIMIZED		

Note:
VR322, VR323 : Process C.B.A.

WITH VECTORSCOPE

(1) Set the white balance switch to "INDOOR" side.
(2) Connect a jumper wire between TP4, TP5 and TP6.
(3) Aim the camera at the White Chart.
(4) Supply the video signal to the vectorscope.
(5) Adjust the White Balance Controls (VR322 and VR323) so that the colour vectors are collected at the center of screen on the vectorscope as shown in Fig. C14.
(6) Remove the jumper wire between TP4, TP5 and TP6.

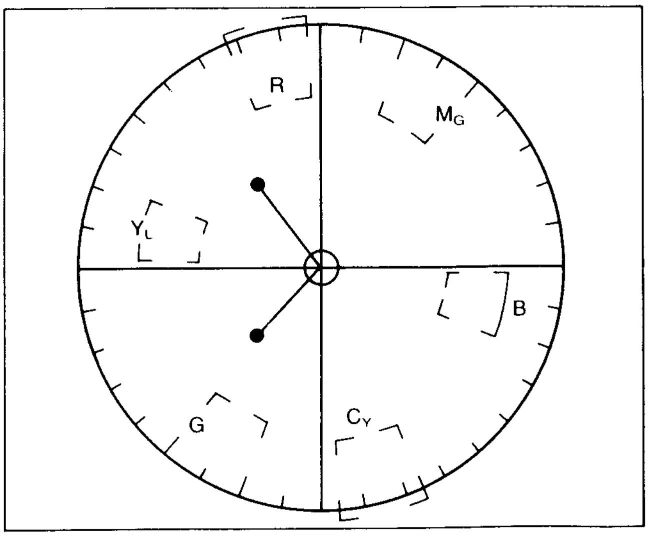

Fig. C14

WITH OSCILLOSCOPE
(1) Adjustment condition and procedure are same as using vectorscope
(2) Adjust VR322 and VR323 so that the waveform is minimized.

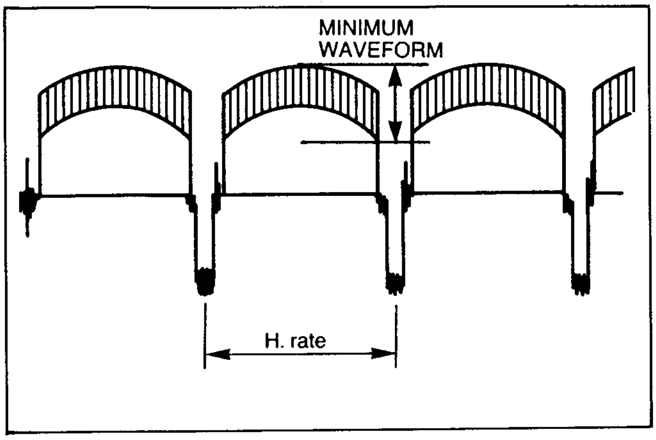

Fig. C15

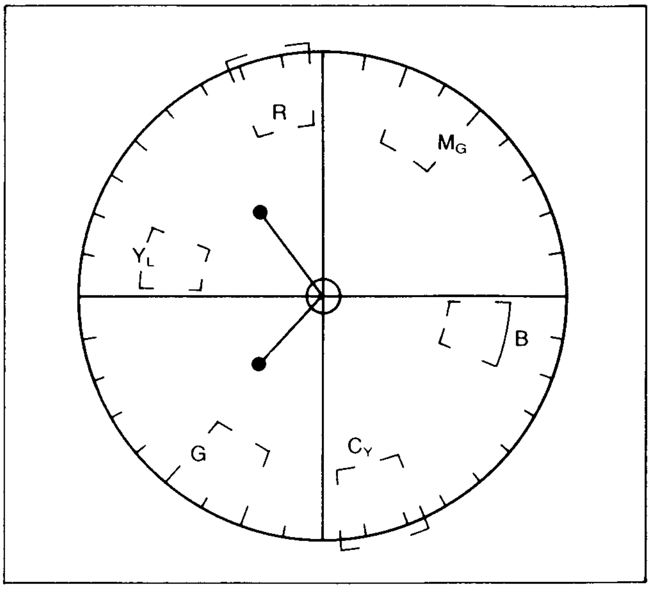

Fig. C16

10. CARRIER BALANCE AND BLACK PEDESTAL ADJUSTMENT

TP	ADJ.	LENS CAP	CHART
VIDEO OUTPUT	VR308 VR318, VR319	YES	

M. EQ.	SPEC.
VECTORSCOPE	CENTER OF VECTORSCOPE
OSCILLOSCOPE	WAVEFORM IS MINIMIZED

Note:
VR308, VR319, VR318 : Process C.B.A.

WHTH VECTORSCOPE
(1) Connect the jumper wire between TP4, TP5 and TP6.
(2) Cover the Camera Lens with the Lens Cap.
(3) Adjust the Black Pedestal Control (VR308) so that the colour vectors collect at the centre of screen on the vectorscope.
(4) Connect the jumper wire between TP6 and Pin 5 of P401
(5) Adjust the Carrier Balance Controls (VR318 and VR319) so that the colour vectors collect at the centre of screen on the vectorscope.
(6) Disconnect the jumper wire between TP4, TP5 TP6 and Pin 5 of P401 .

WITH OSCILLOSCOPE
(1) Adjustment condition and procedure are same as using Vectorscope.
(2) Adjust VR318 and VR319 so that the waveform is minimized.

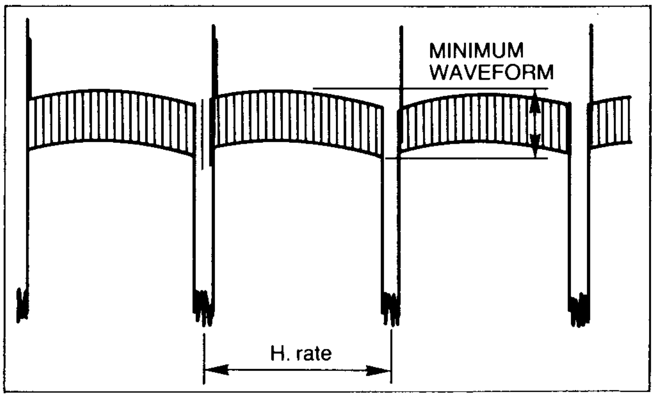

Fig. C17

11. AUTO WHITE BALANCE MODE ADJUSTMENT

Note:
1) Perform both sections of this procedure.

11–1. AWB AUTO MODE (OUTDOOR) ADJUSTMENT

TP	ADJ.	LENS CAP	CHART
VIDEO OUTPUT	VR312 VR313	NO	WHITE CHART

M. EQ.	SPEC.
VECTORSCOPE	CENTER OF VECTORSCOPE
OSCILLOSCOPE	WAVEFORM IS MINIMIZED

Note:
VR312, VR313 : Process C.B.A.

WITH VECTORSCOPE

(1) Set the WHITE BALANCE Switch on the Camera Operation Unit to the "OUTDOOR".
(2) Connect a jumper between TP4, TP5 and TP6.
(3) Aim the camera at the white chart using a 3200 degrees K Halogen lamp.
(4) Supply the video signal to the vectorscope.
(5) Attach the colour temperature conversion filters (VFK0374 and VFK0375) which converts 3200 degrees Kelvin to 5800 degrees Kelvin in front of the Lens (Refer to Note 1 of item 15-3).
(6) If the color temperature conversion filter is not available, use a day light source (Refer to Note 2 of item 15-3).
(7) Adjust the W.B. (B-Y) OUTDOOR GAIN and W.B. (R-Y) OUTDOOR GAIN Controls (VR312 and VR313) so that the colour vectors move to the centre of screen on the vectorscope. (Refer to Fig. C18.)
(8) Remove the colour temperature conversion filter with the fixture from the lens.

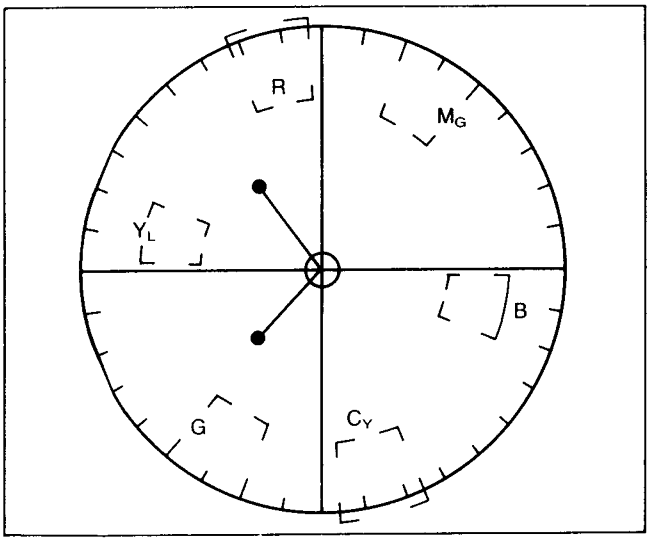

Fig. C18

WITH OSCILLOSCOPE

(1) Adjustment condition and procedure are same as using vectorscope.
(2) Adjust VR312 and VR313 so that the waveform is minimized.

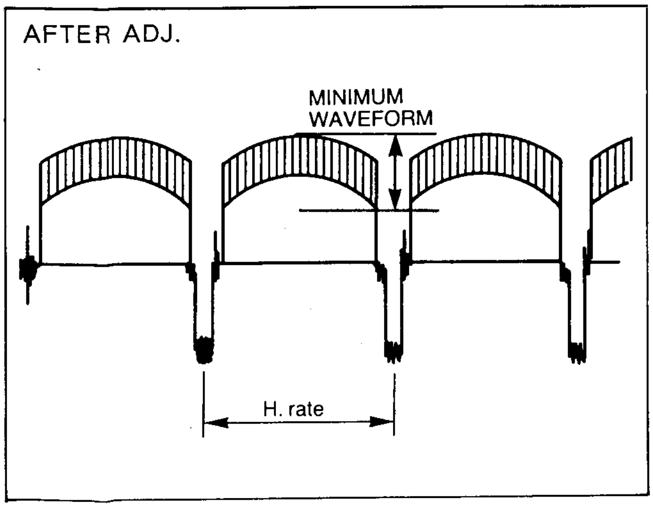

Fig. C19

11-2. AWB MOOE (OFFSET) ADJUSTMENT

TP	ADJ.	LENS CAP	CHART
VIDEO OUTPUT	VR314, VR315	NO	GRAY SCALE CHART
M. EQ.	**SPEC.**		
VECTORSCOPE	CENTER OF VECTORSCOPE		
OSCILLOSCOPE	WAVEFORM IS MINIMIZED		

Note:
VR314, VR315 : Process C.B.A.

WITH VECTORSCOPE

(1) Set the WHITE BALANCE Switch on the Camera Operation Unit to the "INDOOR".
(2) Remove the jumper wire between TP4, TP5 and TP6.
(3) Adjust the W.B. (R-Y OFFSET) and W.B. (B-Y OFFSET) Controls (VR314 and VR315) so that the colour vectors move to the centre of screen on the vectorscope. (Refer to Fig. C20.)

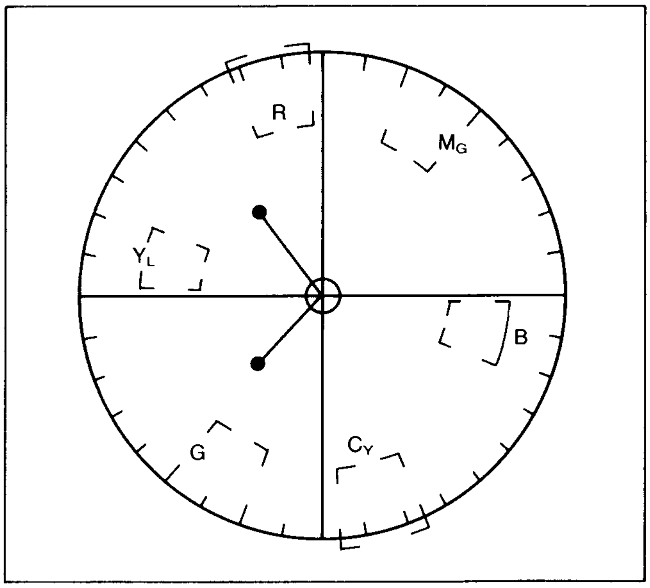

Fig. C20

WITH OSCILLOSCOPE

(1) Adjustment condition and procedure are same as using vectorscope.
(2) Adjust VR314 and VR315 so that the waveform is minimized.

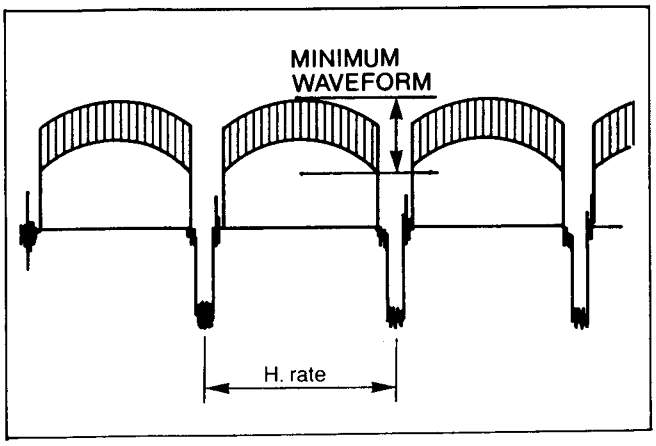

Fig. C21

12. COLOR PHASE AND R-Y/B-Y GAIN Y ADJUSTMENT USTMENT

TP	ADJ.	LENS CAP	CHART
VIDEO OUTPUT	VR316, VR317 VR303, VR324	NO	COLOUR CHIP CHART

M. EQ.	SPEC.
VECTORSCOPE	FIG. C22

Note:
VR316, VR317, VR303, VR324 : Process C.B.A.

(1) Connect a jumper wire between TP4, TP5 and TP6.
(2) Aim the camera at a colour chip chart.
(3) Supply the video signal to the vectorscope.
(4) Adjust the Colour Phase Control (VR303 and VR324), the R-Y Gain Control (VR316) and the B-Y Gain Control (VR317) so that the vector of each colour is as shown in Fig. C22.
(5) Remove the jumper wire between TP4, TP5 and TP6.

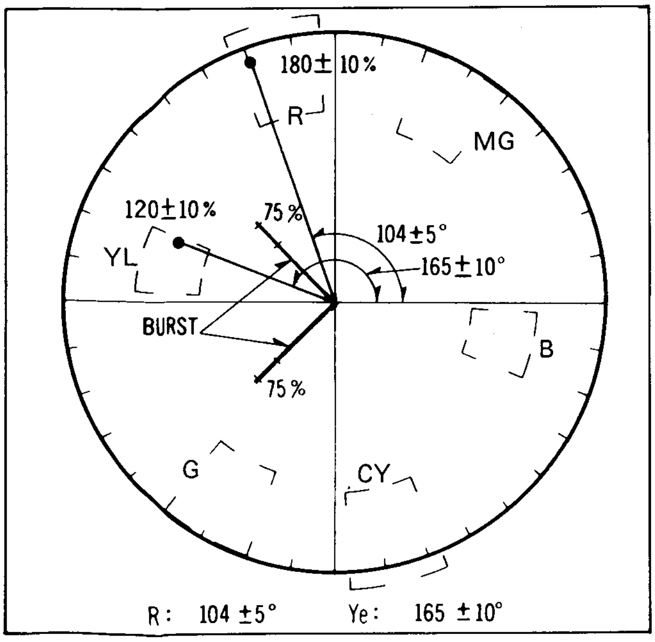

Fig. C22

13. HIGH INTENSITY SUPPRESS ADJUSTMENT

TP	ADJ.	LENS CAP	CHART
	VR306	NO	GRAY SCALE CHART

M. EQ.	SPEC.
TV MONITOR	NO COLOUR INTERFERENCE

Note:
VR306 : Process C.B.A.

(1) Aim the camera at the gray scale chart and focus the lens object.
(2) Press the back light button and keep as it is.
(3) Adjust VR306 so that the monitored gray scale chart does not have colour interfarence.

14. LOW LIGHT INDICATION ADJUSTMENT

TP	ADJ.	LENS CAP	CHART
TP12	VR107	NO	WHITE CHART

M. EQ.	SPEC.
OSCILLOSCOPE	REFER TO FIG. C23.

Note:
TP12, VR107 : Process C.B.A.

(1) Connect the oscilloscope to TP12 and set it in DC mode.
(2) Shade surface of AWT Sensor with hand and adjust VR107 so that DC level at TP12 is changed from "LOW" to "HIGH"

Note:
For more acurate adjustment;
When the illumination of the surface of AWT Sensor is 6lux,the level must be "LOW".
When the illumination of the surface of AWT Sensor is 3lux,the level must be "HIGH".

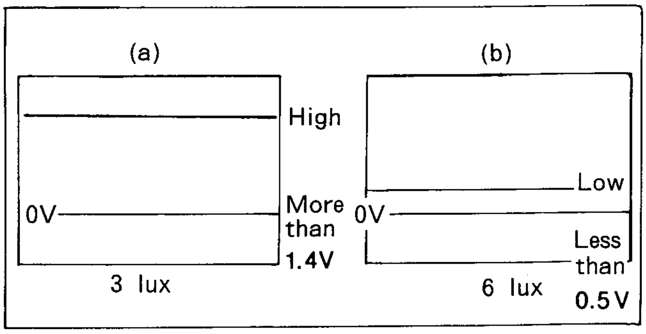

Fig. C23

15. AWT MODE ADJUSTMENT

Note:
1) Perform all three sections of this procedure.
2) Set the WHITE BALANCE Switch on the CAMERA OPERATION UNIT to the "AUTO".

15-1. AWT MODE (OFFSET) ADJUSTMENT

TP	ADJ.	LENS CAP	CHART
VIDEO OUTPUT	VR105, VR106	NO	WHITE CHART

M. EQ.	SPEC.
VECTORSCOPE	CENTER OF VECTORSCOPE
OSCILLOSCOPE	WAVEFORM IS MINIMIZED

Note:
VR105, VR106 : Process C.B.A.

WITH VECTORSCOPE
(1) Aim the camera at the white chart.
(2) Supply the video signal to the vectorscope.
(3) Rotate VR101 and VR102 fully clockwise as shown in Fig. C24

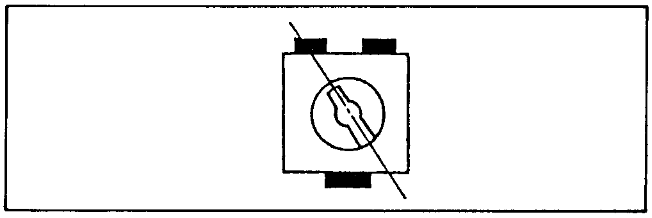

Fig. C24

(4) Adjust the AWT (R-Y OFFSET) and AWT (B-Y OFFSET) controls (VR105 and VR106) so that the colour vectors move to the centre of screen on the vectorscope. (Refer to Fig. C25.)

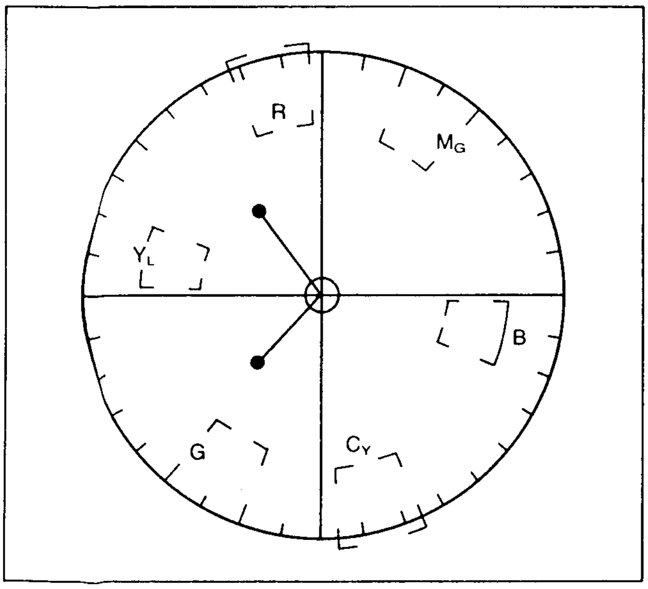

Fig. C25

WITH OSCILLOSCOPE
(1) Adjustment condition and procedure are same as using vectorscope.
(2) Adjust VR105 and VR106 so that the waveform is minimized.

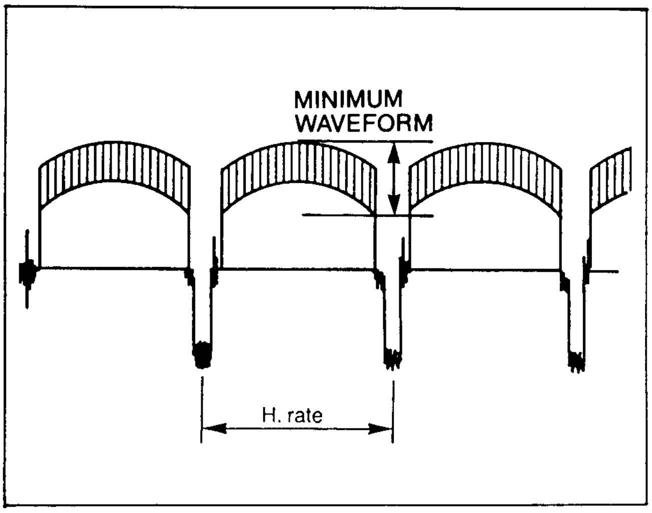

Fig. C26

15-2. AWT MODE (GAIN) ADJUSTMENT

TP	ADJ.	LENS CAP	CHART
VIDEO OUTPUT	VR103, VR104, VR105, VR106	NO	WHITE CHART

M. EQ.	SPEC.
VECTORSCOPE	CENTER OF VECTORSCOPE
OSCILLOSCOPE	WAVEFORM IS MINIMIZED

Note:
VR103, VR104, VR105, VR106 : Process C.B.A.

WITH VECTORSCOPE
(1) Aim the camera at the white chart using a 3200 degrees K Halogen lamp.
(2) Supply the video signal to the vectorscope.
(3) Attach the color temperature conversion filter (VFK0375) which converts 3200 degrees Kelvin to 3400 degrees Kelvin in front of the Lens and AWT Sensor.(Refer to Note 1 of item. 15-3)
(4) If the colour temperature conversion filter is not available, use a day light source. (Refer to Note 2 of item. 15-3)
(5) Adjust the AWT (R-Y GAIN) and AWT (B-Y GAIN) Controls (VR103 and VR104) so that the color vectors move to the centre of screen on the vectorscope. (Refer to Fig. C27.)

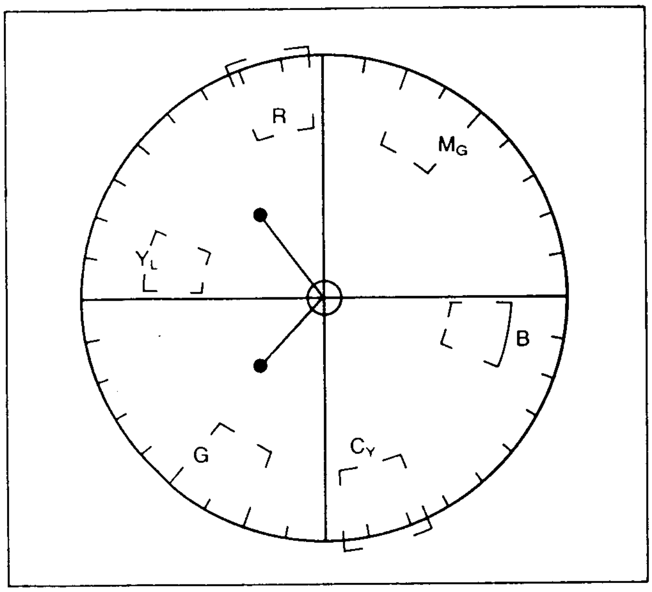

Fig. C27

(6) Next, remove the colour temperature conversion filter with the fixture from the Lens.
(7) If the colour vectors do not collect at the centre, adjust the AWT (R–Y OFFSET) and AWT (B–Y OFFSET) Controls (VR105 and VR106) so that the colour vectors move to the centre of screen on the vectorscope.
(8) Repeat steps (1)–(7) so that the colour vectors collect at the center of screen on the vectorscope.

WITH OSCILLOSCOPE
(1) Adjustment condition and procedure are same as using vectorscope.
(2) Adjust VR103, VR104, VR105 and VR106 so that the waveform is minimized.

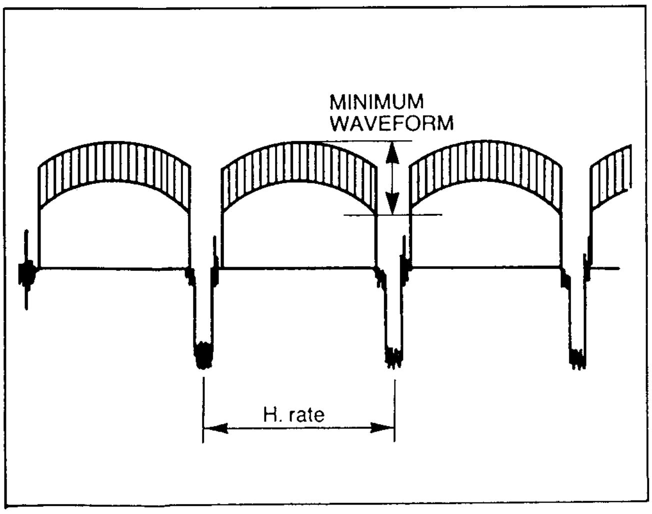

Fig. C28

15–3. HIGH COLOR TEMPERATURE CLIP ADJUSTMENT

TP	ADJ.	LENS CAP	CHART
VIDEO OUTPUT	VR101, VR102	NO	WHITE CHART

M. EQ.	SPEC.
VECTORSCOPE	CENTER OF VECTORSCOPE
OSCILLOSCOPE	WAVEFORM IS MINIMIZED

Note:
VR101, VR102 : Process C.B.A.
When this adjustment is performed, previous items 15–1 and 15–2 must be completed.

WITH VECTORSCOPE
(1) Aim the camera at the white chart using a 3200 degrees K Halogen lamp .
(2) Supply the video signal to the vectorscope.
(3) Attach the colour temperature conversion filters (VFK0374 and VFK0375) which convert 3200 degrees Kelvin to 5800 degrees Kelvin in front of the Lens and AWT Sensor. (Refer to Note 1 of item. 15–3).
(4) If the colour temperature conversion filters are not available, use a day light source. (Rfer to Note 2 of item. 15–3)
(5) Adjust the Colour Temperature Clip Controls (VR101 and VR102) so that the colour vectors collect at the contre of screen on the vectorscope.

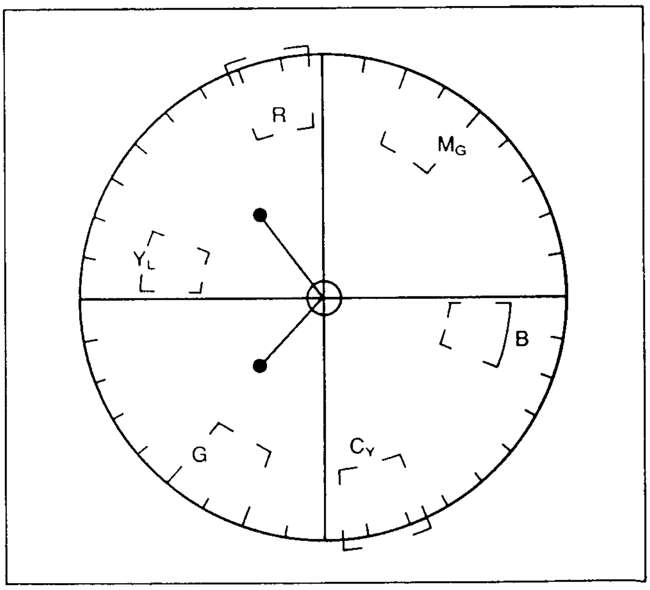

Fig. C29

WITH OSCILLOSCOPE
(1) Adjustment condition and procedure are same as using vectorscope.
(2) Adjust VR101 and VR102 so that the waveform is minimized.

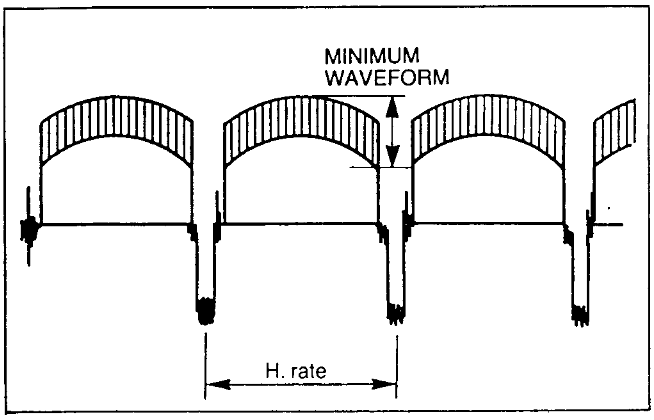

Fig. 30

Note 1:
Attach the fixture to the Lens, then attach the colour temperature conversion filter to fixture. It can be procured at a Camera Store. Please construct the fixture using the sheet attached to inside cover page at the back of the Service Manual. (Refer to Fig. C31.)

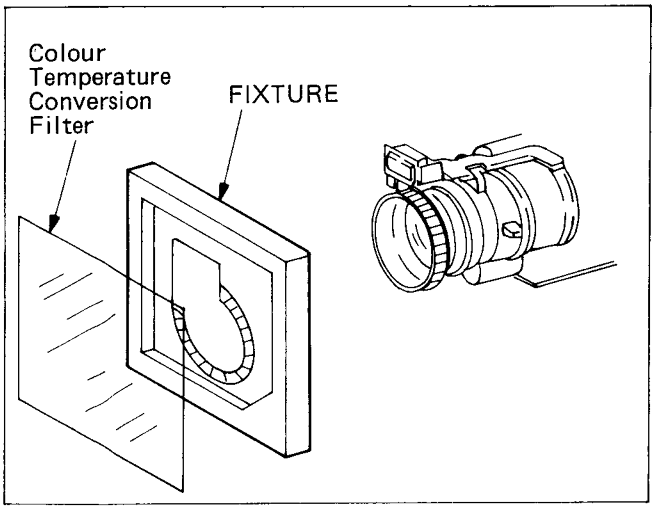

Fig. C31

Note 2:
(1) Aim the camera at a sunny outdoor source (window, etc.).
(2) Incoming light must be from an outdoor source only; source and illumination on the sensor must be more than 500Lx, and colour temperature must be within 5000 degrees -6000 degrees Kelvin.
(Refer to Fig. C26.)

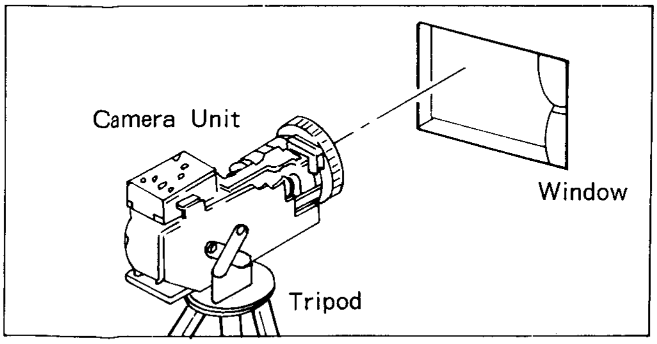

Fig. C32

AUTO FOCUS SECTION

PREPARATION

The following adjustments are for the Auto Focus Unit.

(1) Camera zoom is positioned at the end of TELE side.

16. AF GATE ADJUSTMENT

TP	ADJ.	IRIS CAP	CHART
TP602, TP603	C656	NO	
M. EQ.		SPEC.	
OSCILLOSCOPE		1T = 9.6 +- 0.4u-sec.	

Note:
TP602, TP603, C656 : AF C.B.A.

(1) Set the AF Gate Control (C656) as shown in Fig. C33

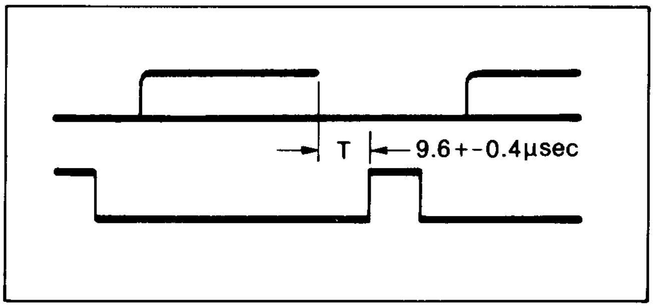

Fig. C33

17. BIMOLF GAIN CONTROL ADJUSTMENT

TP	ADJ.	LENS CAP	CHART
TP604	VR603	YES	
M. EQ.	SPEC.		
OSCILLOSCOPE	A = 16V +- 0.5Vp-p		

Note:
TP604, VR603 : AF C.B.A.

(1) Set the Focus Switch to the MANUAL position.
(2) Cover the camera lens with the lens cap.
(3) Connect the scope to the TP604.
(4) Adjust the Bimolf Gain Control (VR603) so that the signal level (A) is 16V +– 0.5Vp–p.

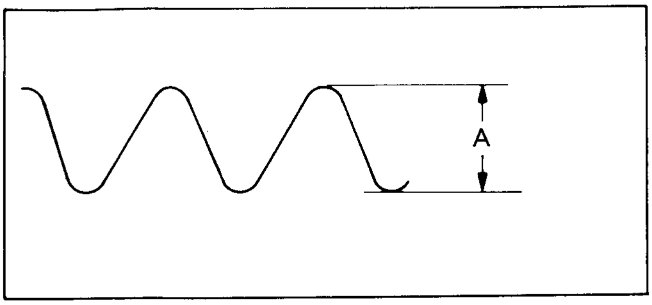

Fig. C34

18. AF AMP BIAS AND GAIN ADJUSTMENT

TP	ADJ.	LENS CAP	CHART
TP3, TP9, TP10, TP11	VR601, VR602	NO	GRAY SCALE CHART

M. EQ.	SPEC.
D.V.M.	----------------

Note:
TP3, TP9, TP10, TP11 : Process C.B.A.
VR601, VR602 : AF C.B.A.

(1) Connect a jumper wire between TP3 and TP10.
(2) Adjust the AF AMP BIAS Control (VR601) so that the voltage level at TP9 is 1.74V +– 0.02V.
(3) Disconnect the jumper wire between TP3 and TP10.
(4) Next, connect a jumper wire between TP10 and TP11.
(5) Adjust the AF AMP Gain Control (VR602) so that the voltage Level of TP9 is 3.72V +– 0.05V.
(6) Disconnect the jumper wire between TP10 and TP11.
(7) Next, confirm the voltage level at TP9 by connecting a jumper wire between TP3 and TP10.
(8) If the voltage level at TP9 is not 1.74V +– 0.02V, repeat steps (1) – (6).

19. AF VH FREQUENCY ADJUSTMENT

TP	ADJ.	IRIS CAP	CHART
TP605	C621	NO	WHITE/GRAY CHART

M. EQ.	SPEC.
OSCILOSCOPE	A = 1.0 +– 0.04Vp–p

Note:
TP605, TP611, C621 : AF C.B.A.

Zoom : TELE Side
Focus: AUTO

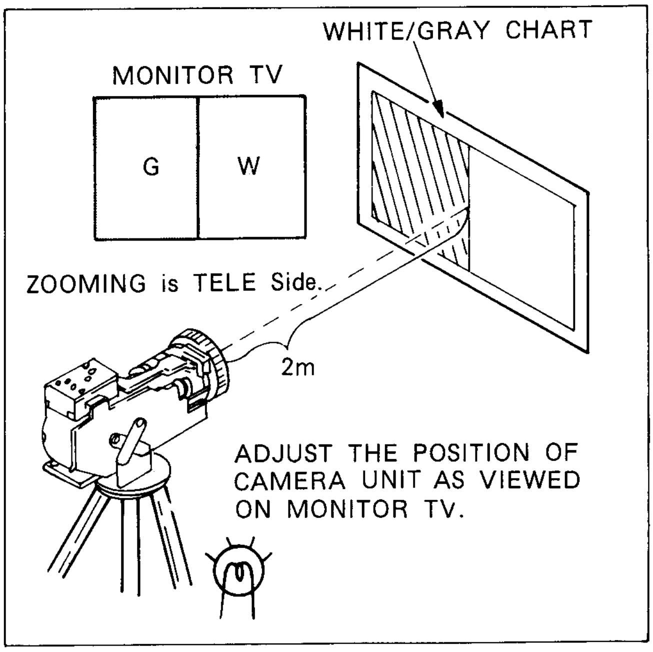

Fig. C35

(1) Aim the Camera at the White/Gray Chart attached to inside of this Service Manual.
(2) Confirm that the voltage at TP611 is 2.2V +– 0.1V.
(3) If the Voltage at TP611 is not 2.2V +– 0.1V, adjust the light source so that the voltage at TP611 is 2.2V +– 0.1V.
(4) Adjust the C621 so that the "A" level at TP605 is 1.0 +– 0.05Vp–p.

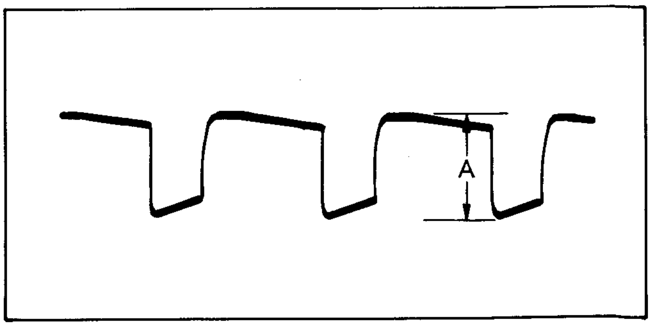

Fig. C36

2-4-2. ELECTRICAL ADJUSTMENT FOR E.V.F. SECTION

PREPARATION

The following adjustments are for the Electronic Viewfinder.

(1) Connect the Viewfinder plug to the E.V.F. connector on the unit.
(2) The camera circuit must be completely aligned before viewfinder adjustments are made.

1. H-OSC ADJUSTMENT

TP	ADJ.	LENS CAP	CHART
Pin2 of P701	VR702	NO	BALL CHART
M. EQ.		**SPEC.**	
FREQUENCY COUNTER		15.6KHz +- 0.1KHz	

Note:
P701, VR702 : E.V.F. C.B.A.

(1) Connect the scope to Pin2 of P701, use DC
(2) Adjust the H-OSC (VR702) so that the frequency is 15.8 +- 0.1 KHz.

2. CENTERING ADJUSTMENT

(1) Aim the camera at the registration chart.
(2) Adjust the Deflection Yoke Centering Magnets by turning them so that the picture on monitor TV is centered.

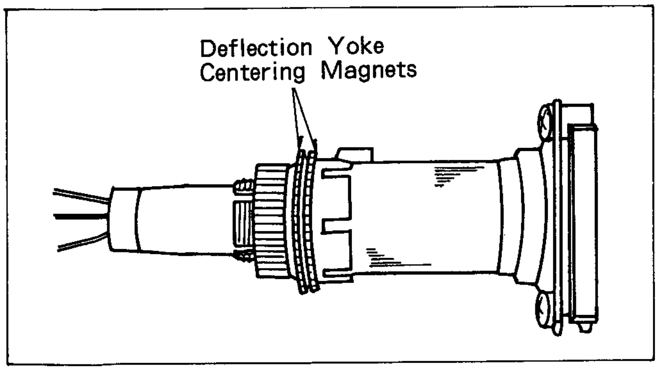

Fig. C39

3. FOCUS ADJUSTMENT

TP	ADJ.	LENS CAP	CHART
	VR704	NO	BALL CHART
M. EQ.		**SPEC.**	
VIEWFINDER		BEST RESOLUTIONON	

Note:
VR704 : E.V.F. C.B.A.

(1) Aim the camera at the Ball chart.
(2) Adjust the focus control (VR704) for best resolution in the viewfinder.

4. V.SIZE ADJUSTMENT

TP	ADJ.	LENS CAP	CHART
	VR701	NO	GRAY SCALE CHART
M. EQ.		**SPEC.**	
VIEWFINDER		VERTICAL SIZE IS FIXED.	

Note:
VR701 : E.V.F. C.B.A.

(1) Aim the camera at the gray scale chart.
(2) Adjust the Vertical Size (VR701) so the Vertical Size is correct and the picture does not roll as shown in Fig. C40.

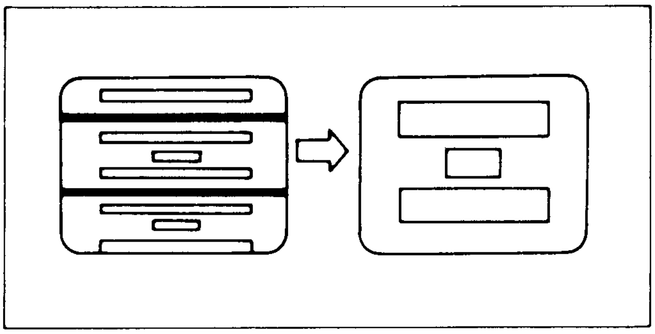

Fig. C40

5. BRIGHTNESS ADJUSTMENT

TP	ADJ.	LENS CAP	CHART
	VR705	NO	GRAY SCALE CHART
M. EQ.		**SPEC.**	
VIEWFINDER		NATURAL GRADATION	

Note:
VR705 : E.V.F. C.B.A.

(1) Aim the camera at the gray scale shart.
(2) Adjust the Brightness Control (VR705) so that the black and white Bars in the E.V.F. screen are the same as they are in the monitor TV screen.

LOCATION OF TEST POINTS & CONTROLS —Camera Section—

PROCESS C.B.A. (COMPONENT SIDE)

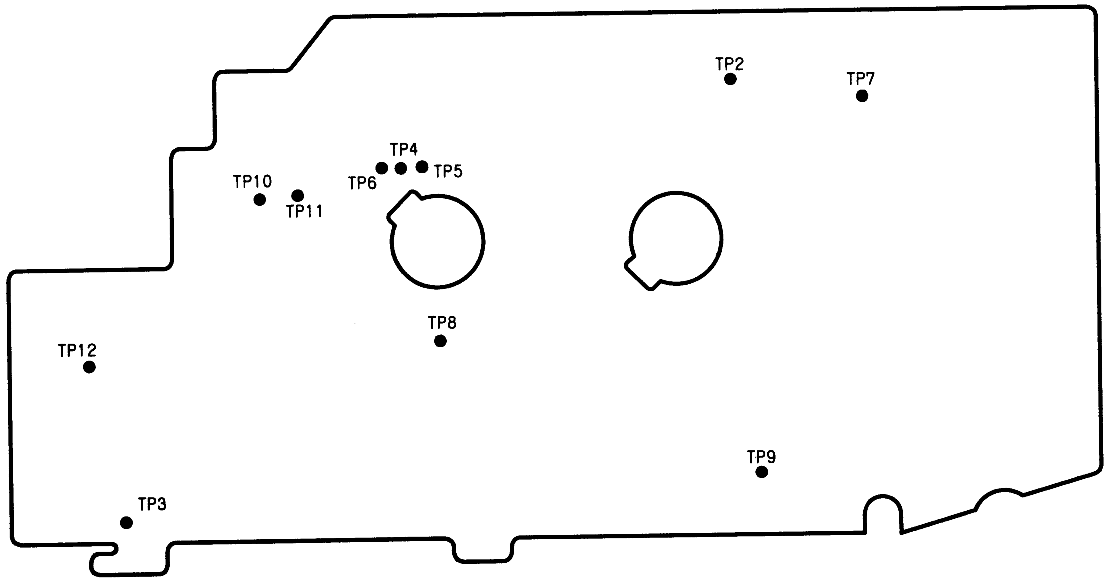

PROCESS C.B.A. (FOIL SIDE)

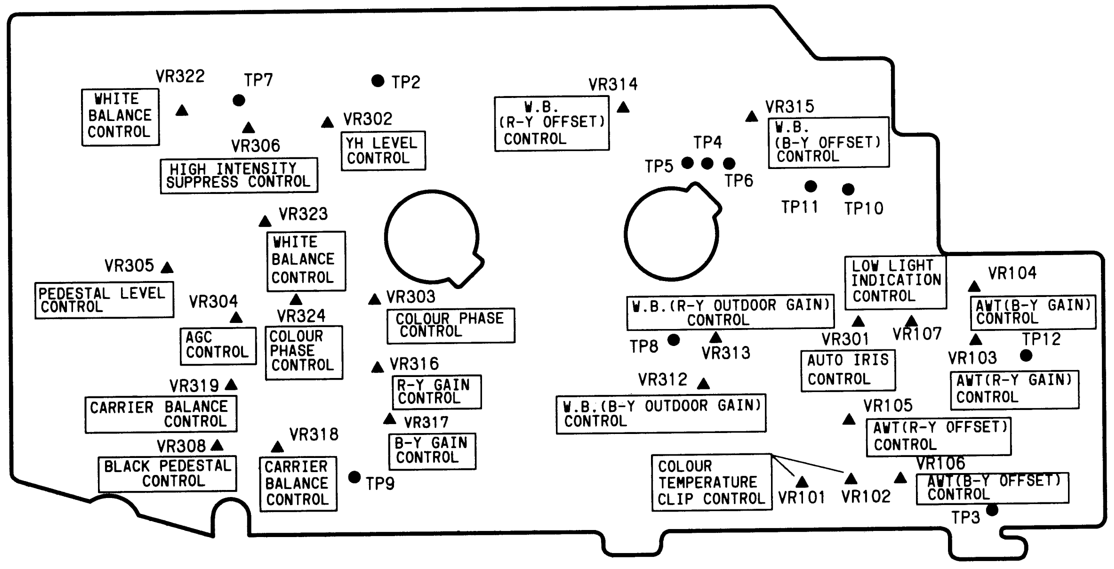

AUTO FOCUS C.B.A.

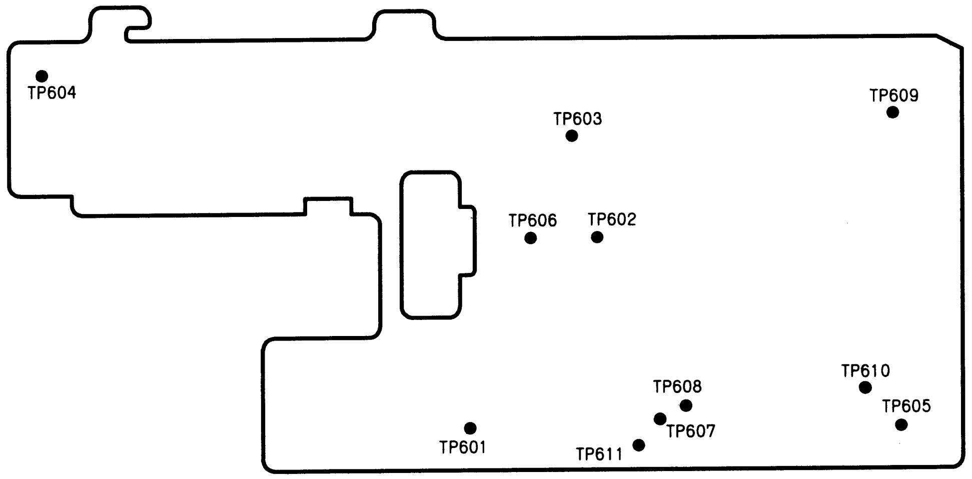

(COMPONENU SIDF)

AUTO FOCUS C.B.A.

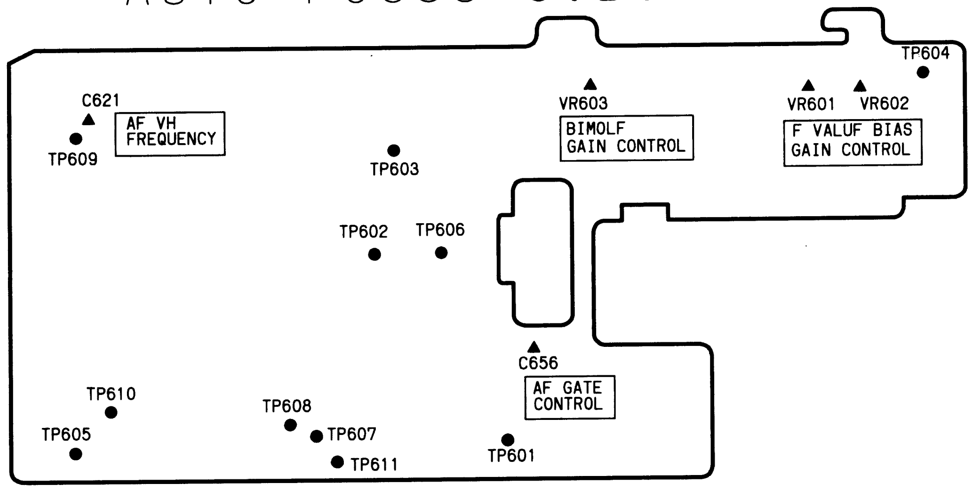

(FOIL SIDE)

E.V.F. C.B.A.

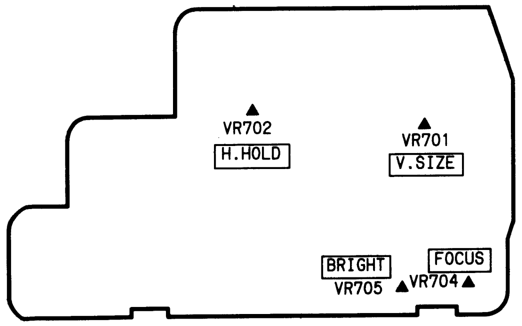

SUB PROCESS C.B.A.

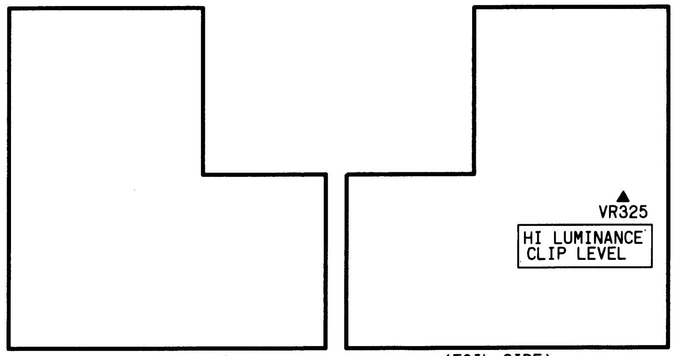

(COMPONENT SIDE) (FOIL SIDE)

SENSOR C.B.A.

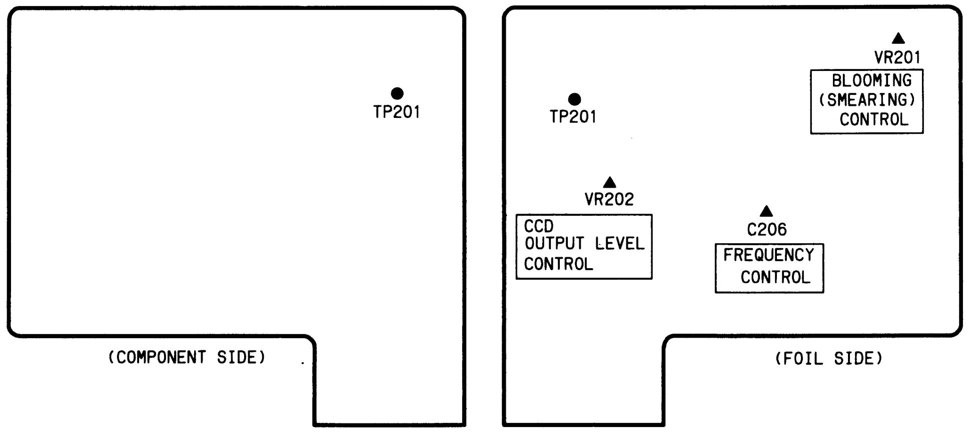

LOCATION OF TEST POINTS & CONTROLS — VTR Section —

MAIN C.B.A. (FOIL SIDE)

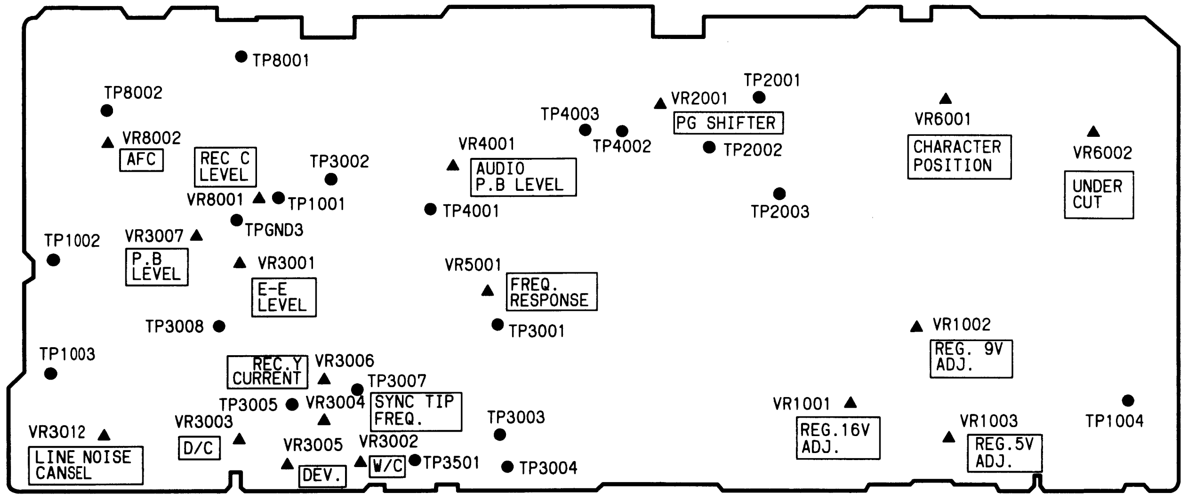

MAIN C.B.A. (COMPONENT SIDE)

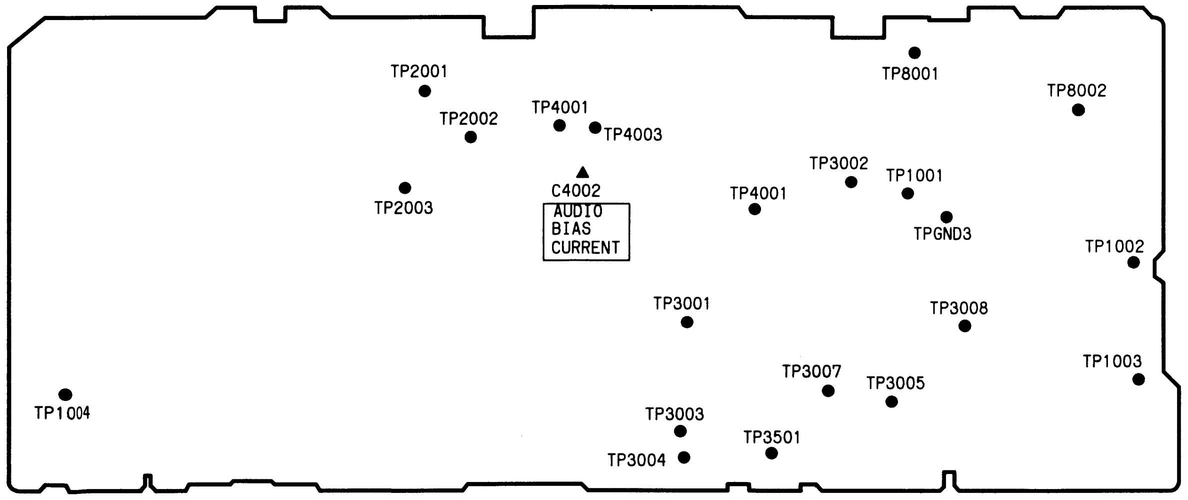

2-4-3. ELECTRICAL ADJUSTMENT FOR VTR SECTION

TEST EQUIPMENT AND TOOL

The following equipment is required for adjustment of the VTR section of NV-M7.

1) VTVM (Vacuum Tube Volt Meter)
   DVM (Digital Volt Meter)
   Voltage Range : 0.01～50V
2) Dual Trace Oscilloscope
   Voltage Range : 0.06～50V/div
   Frequency Range : 0～10MHz
   Probe : 10:1 ro 1:1
3) Frequency counter
   Frequency Range : 0～10MHz
4) Signal Generator (Sinewave)
   Frequency Range :0～10MHz
5) Video Sweep Generator
   Frequency Range : 0～10MHz
6) Colour Monitor TV
7) Plastic Tip Driver
8) VHS Alignment Tape

PREPARATION I (For EO/EN/A/EA/EM/AM models)

(1) Remove the casing panels
    (Refer to the desassemble section)
(2) Supply the video signal and audio signal to the video section by using the Line Adaptor (VW-KM3) as shown below.

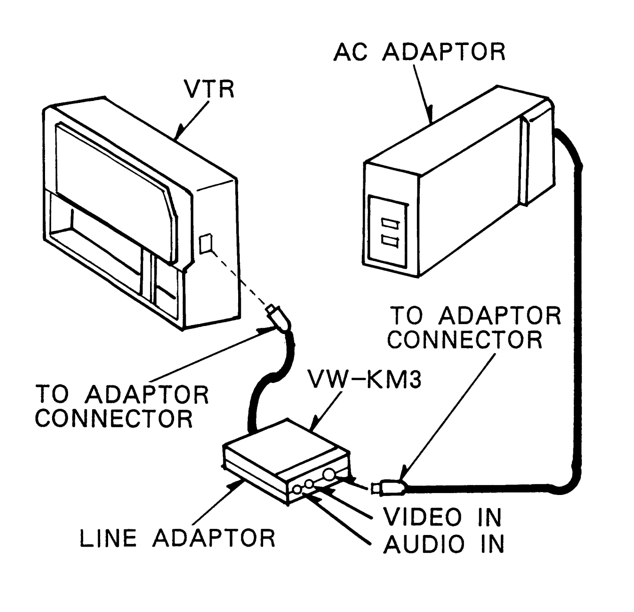

Fig. E1

Note:
The Line Adaptor (VW-KM3) is available to check the only VTR section.

PREPARATION II (For B/EG/E models)

(1) Remove the casing panels.
    (Refer to the disasemble section)
(2) Connect the jumper wire between P6011-5 and GND as shown below.
(3) Supply the video signal and audio signal to video section by using the Line Adaptor (VW-KM3) as shown Fig. E1.

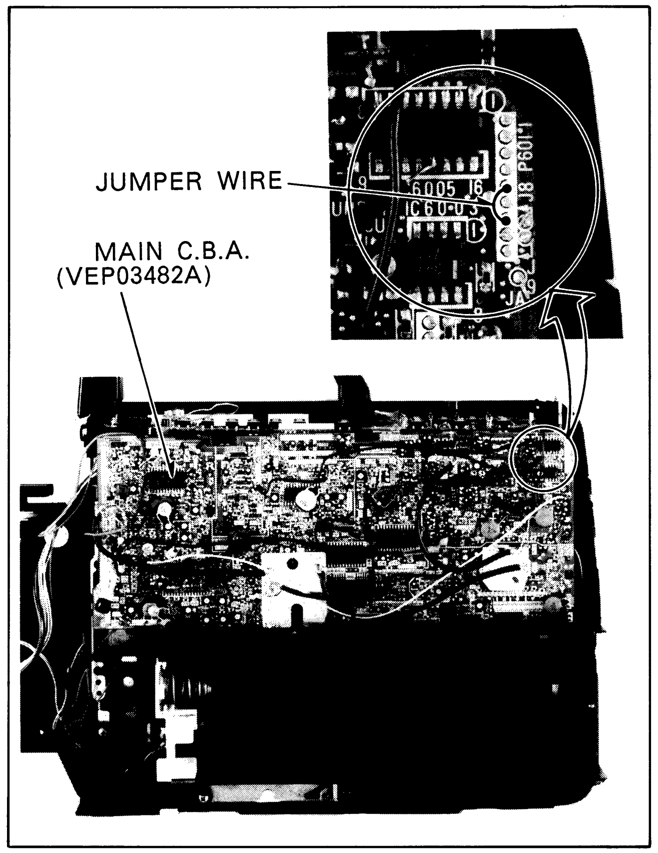

Fig. E2

HOW TO READ THE ADJUSTMENT PROCEDURES

Connecting Point (Test Point) of Measuring Equipment

Mode of VTR
Example: SELF RECORD
Record a Video Signal
Play back the just recorded portion

Component being Adjusted

TP	ADJ.	MODE	INPUT
TP2001 TP2002	VR2002	SELF RECORDING	VIDEO SIGNAL
TAPE	**M. EQ.**	**SPEC.**	
BLANK TAPE	OSCILLO-SCOPE	0.4±0.4msec.	

Measuring Equipment

Specification for Adjustment

Tape for the adjustment
Example: VFJ8125H3F use arrangement tape VFJ8125H3F

Supply a Video Signal to the VIDEO IN

Note: If ⊠ appears in any block, this means it is not used or not important.

Fig. E3

FOR TRIGGERING OF THE OSCILLOSCOPE

To trigger the Oscilloscope, the following test point is used.
H.rate : TP3002 (Video output)
V.rate : TP2001 (Head Switching signal)

POWER SECTION

1. REG. 9V ADJUSTMENT

TP	ADJ.	MODE	INPUT
TP1002	VR1002	REC • PLAY	
TAPE	**M. EQ.**	**SPEC.**	
BLANK TAPE	D.V.M.	$8.6^{+0.1}_{-0.05}$V	

2. REG. 5V ADJUSTMENT

TP	ADJ.	MODE	INPUT
TP1003	VR1003	CAMERA RECORDING	
TAPE	**M. EQ.**	**SPEC.**	
BLANK TAPE	D.V.M.	4.91±0.02V	

3. REG. 16V ADJUSTMENT

TP	ADJ.	MODE	INPUT
TP1001	VR1001	REC • PLAY	
TAPE	**M. EQ.**	**SPEC.**	
BLANK TAPE	D.V.M.	15.2±0.05V	

4. UNDER CUT ADJUSTMENT

TP	ADJ.	MODE	INPUT
P6011-(6)	VR6002	REC • PLAY	
TAPE	**M. EQ.**	**SPEC.**	
BLANK TAPE	OSCILLO-SCOPE	HIGH → PULSE → LOW	

(1) Supply the DC voltage 10.5+−0.05V to the 14P multi−connector Pin (1) Hot and Pin (3) GND.
(2) Connect the oscilloscope to P6011−(6).
(3) Turn the under cut control (VR6002) fully counter clockwise.
(4) Turn VR6002 clockwise slowly until the wave−form is changed from high to low through the pulse trains.

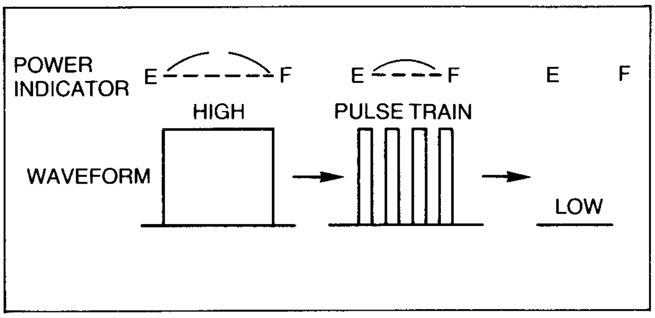

Fig. E4

SERVO SECTION

5. PG SHIFTER ADJUSTMENT

TP	ADJ.	MODE	INPUT
TP2001 TP3002	VR2001	PLAY	
TAPE	**M. EQ.**	**SPEC.**	
ALIGNMENT TAPE (VFJ8125H3F)	OSCILLO-SCOPE	6.5H±0.5H	

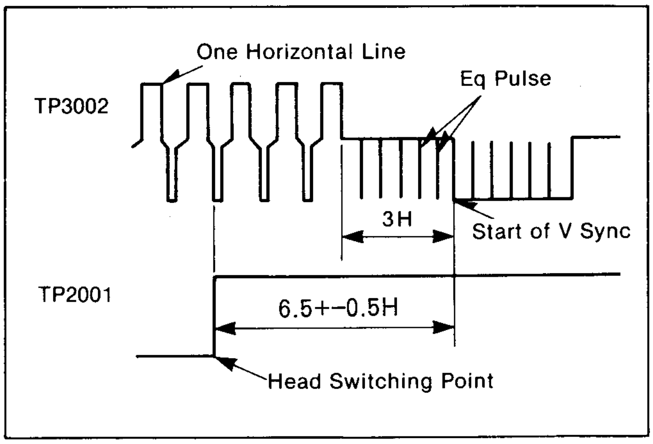

Fig. E5

LUMINANCE & CHROMINANCE SECTION

6. E-E LEVEL ADJUSTMENT

TP	ADJ.	MODE	INPUT
TP3002	VR3001	STOP	COLOUR BAR
TAPE	**M. EQ.**	**SPEC.**	
	OSCILLO-SCOPE	A=1.0±0.1Vp-p B=0.6±0.1Vp-p	

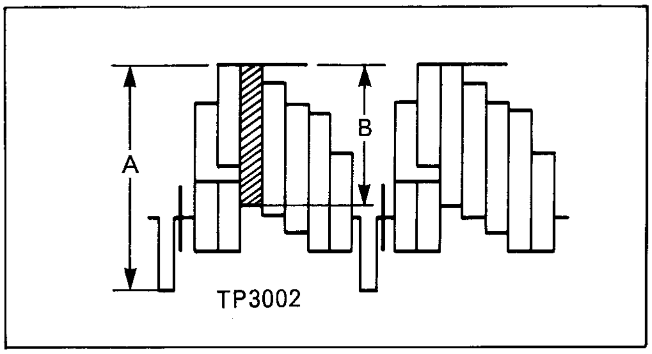

Fig. E6

7. SYNC TIP FREQUENCY AND DEVIATION ADJUSTMENT

7-1. Sync Tip Frequency Adjustment

TP	ADJ.	MODE	INPUT
TP3007	VR3004	REC • PLAY	
TAPE	**M. EQ.**	**SPEC.**	
BLANK TAPE	FREQ. COUNTER	3.8MHz±0.05MHz	

7-2. Deviation Adjustment

TP	ADJ.	MODE	INPUT
TP3003 (HOT) TP3004 (GND)	VR3005	REC • PLAY	COLOUR BAR
TAPE	**M. EQ.**	**SPEC.**	
BLANK TAPE	OSCILLO-SCOPE FREQ. COUNTER	INNER BEAT IS MAXIMUM	

(1) Supply colour bar video signal to 14P multi connector through Line adaptor (VW-KM3). (See, PREPARATION I or II).

(2) Connect a sinal generator (sine wave) to TP3007 on Main C.B.A. through a resistor (1 Kohm). Set the frequency and output level of the signal generator.
Frequency : 4.8MHZ+-0.05MHZ
Output level : 0.1Vp-p.

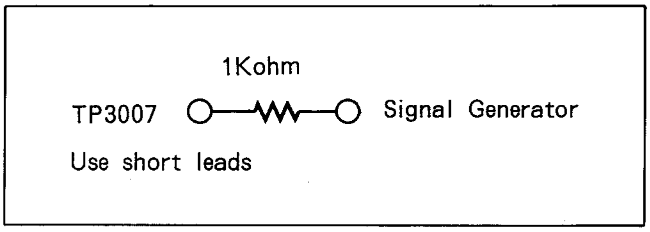

Fig. E7

(3) Connect the oscilloscope to TP3003 (HOT) and TP3004 (GND) on Main C.B.A. Head Amp Section, use TP2001 as a trigger.

(4) Adjust VR3005 so that inner beat at white portion of colour bar becomes maximum.

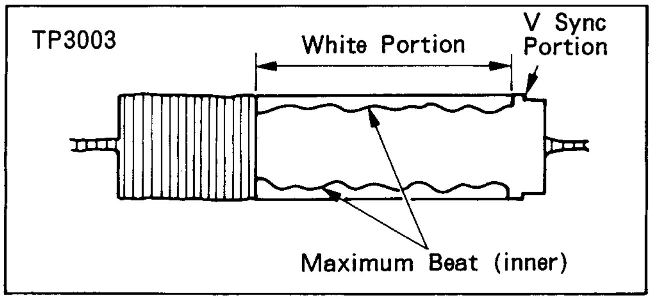

Fig. E8

(Misadjustment)

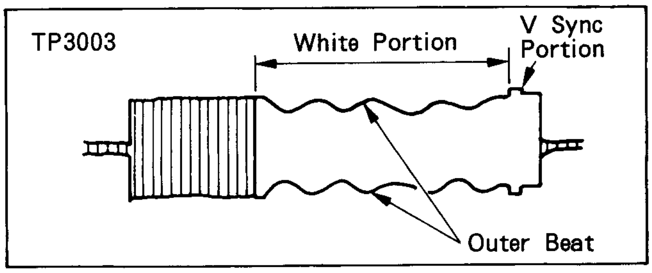

Fig. E9

8. AFC ADJUSTMENT

TP	ADJ.	MODE	INPUT
TP8003	VR8002	STOP	
TAPE	**M. EQ.**	**SPEC.**	
	FREQ. COUNTER	4.2±0.05 MHz	

(1) Connect Diode to TP8002 as shown below.

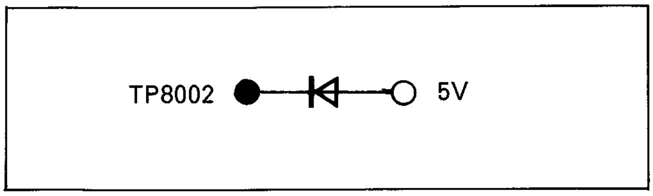

Fig. E10

(2) Connect the frequency counter to TP8003.
(3) Adjust the VR8002 so that frequency become 4.2+–0.05MHZ.

9. WHITE AND DARK CLIP ADJUSTMENT

TP	ADJ.	MODE	INPUT
TP3005	VR3002 VR3003	REC	COLOUR BAR (W/WHITE WINDOW)
TAPE	**M. EQ.**	**SPEC.**	
	OSCILLO-SCOPE	A=188±5% B=155±5%	

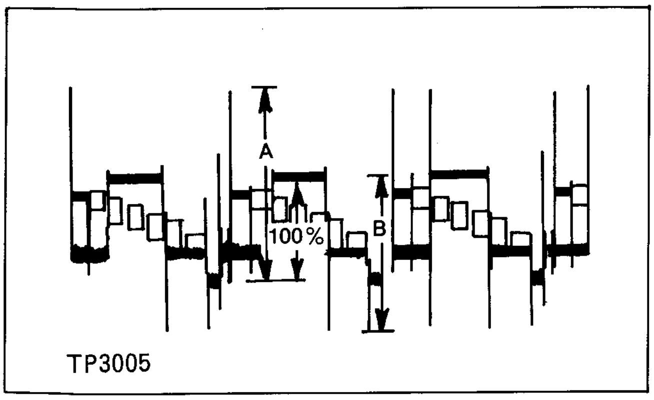

Fig. E11

10. RECORDING CURRENT ADJUSTMENT

10-1. REC CHROMA LEVEL ADJUSTMENT

TP	ADJ.	MODE	INPUT
TP5003 (HOT) TP5004 (GND)	VR8001	REC • PLAY	COLOUR BAR (W/WHITE WINDOW)
TAPE	**M. EQ.**	**SPEC.**	
BLANK TAPE	OSCILLO-SCOPE	40±5mVp-p	

(1) Connect the Oscilloscope to TP5003 (HOT) and TP5004 (GND).
(2) Eliminate Luminance signal by turning VR3006.
(3) Adjust VR8001 so that Chroma level become 40+–5mVp–p.

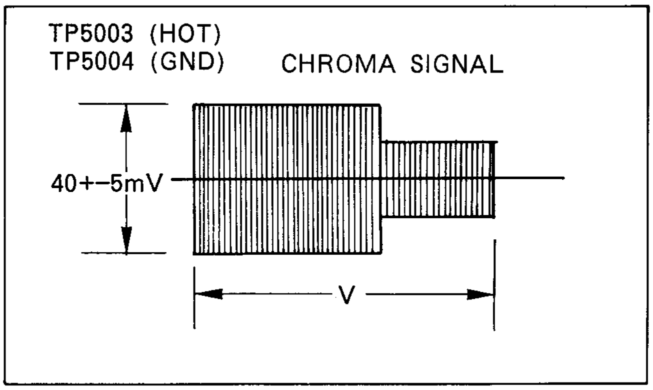

Fig. E12

10-2. LUMINANCE RECORDING CURRENT ADJUSTMENT

TP	ADJ.	MODE	INPUT
TP5003 (HOT) TP5004 (GND)	VR3006	REC • PLAY	VIDEO SIGNAL
TAPE	**M. EQ.**	**SPEC.**	
BLANK TAPE	OSCILLO-SCOPE	140mV±5mVp-p	

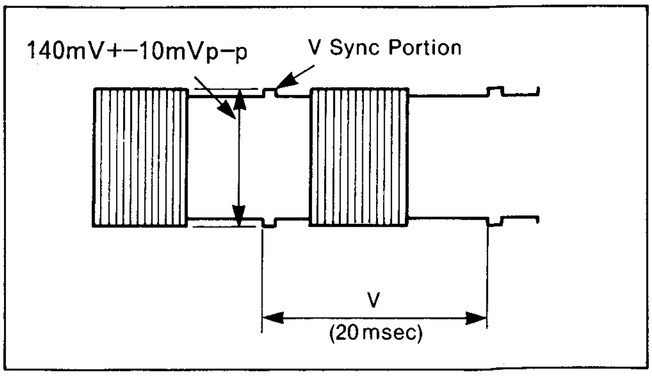

Fig. E13

11. LINE NOISE CANCEL ADJUSTMENT

TP	ADJ.	MODE	INPUT
TP3008	VR3012	SELF RECORDING	
TAPE	**M. EQ.**	**SPEC.**	
BLANK	OSCILLO-SCOPE	Less than 16mVp-p	

(1) Record the video signal.
(2) Connect the oscilloscope to TP3008.
(3) Playback just recorded portion.
(4) Adjust VR3012 so that level between sync and white 100% become less than 16mVp-p.

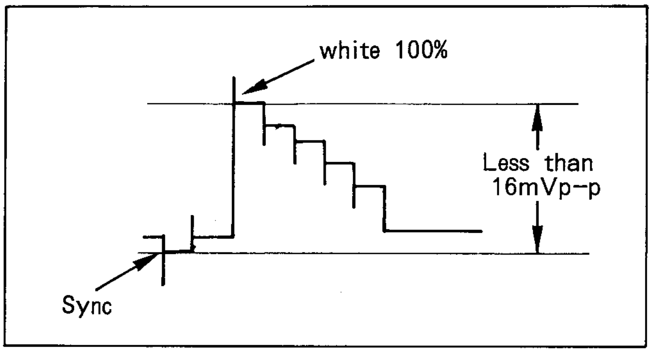

Fig. E14

12. VIDEO PLAYBACK LEVEL ADJUSTMENT

TP	ADJ.	MODE	INPUT
TP3002	VR3007	SELF RECORDING	COLOUR BAR
TAPE	**M. EQ.**	**SPEC.**	
	OSCILLO-SCOPE	A=1.0±0.05Vp-p B=0.5±0.15Vp-p	

(1) Record the colour bar signal.
(2) Connect the oscilloscope to TP3002.
(3) Adjust the VR3007 so that level become A=1.0+−0.05Vp−p B=0.5+−0.15Vp−p.

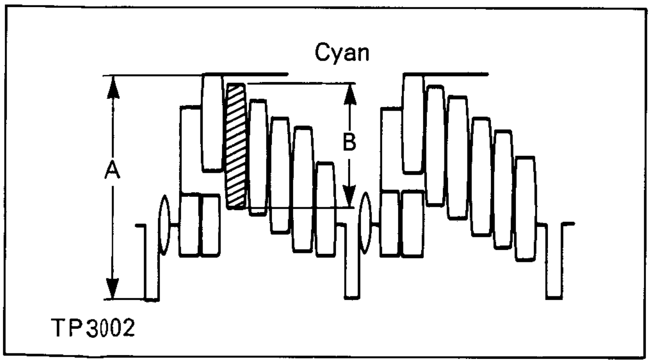

Fig. E15

AUDIO SECTION

13. AUDIO BIAS CURRENT ADJUSTMENT

TP	ADJ.	MODE	INPUT
TP4002 (HOT) TP4003 (GND)	C4002	REC • PLAY	
TAPE	**M. EQ.**	**SPEC.**	
BLANK TAPE	D.V.M.	2.9mVrms±0.1mVrms	

14. AUDIO PLAYBACK LEVEL ADJUSTMENT

TP	ADJ.	MODE	INPUT
LINE OUT (TP4001)	VR4001	SELF RECORDING	1KHz AUDIO -60dB SIGNAL/ VIDEO SIGNAL
TAPE	**M. EQ.**	**SPEC.**	
BLANK TAPE	SIGNAL GENERA-TOR/D.V.M.	EE LEVEL=−8.0±2dB P.B LEVEL=−±1dB	

15. CHARACTER POSITION ADJUSTMENT

TP	ADJ.	MODE	INPUT
VIEW FINDER	VR6001	STOP	
TAPE	**M. EQ.**	**SPEC.**	
	VIEW FINDER	CHARACTER IS CENTER	

(1) Connect the EVF unit to the VTR unit.
(2) Display the battery remaining indicator and counter number on the EVF.
(3) Adjust the osc control (VR6001) so that the character position is shown below.

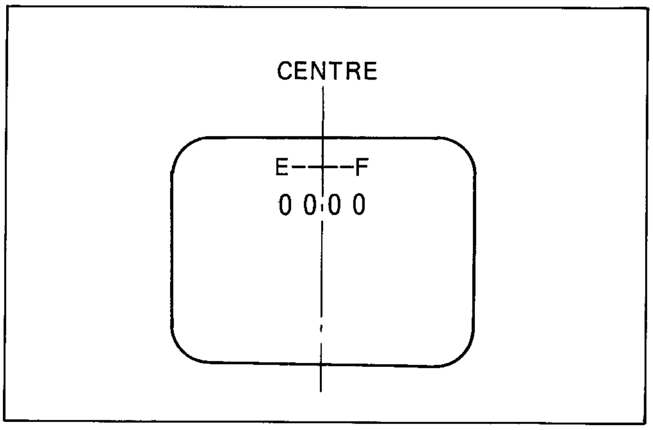

Fig. E16

SECTION 3
BLOCK DIAGRAMS & SCHEMATIC DIAGRAMS
3-1. CAMERA STAGE BLOCK DIAGRAM

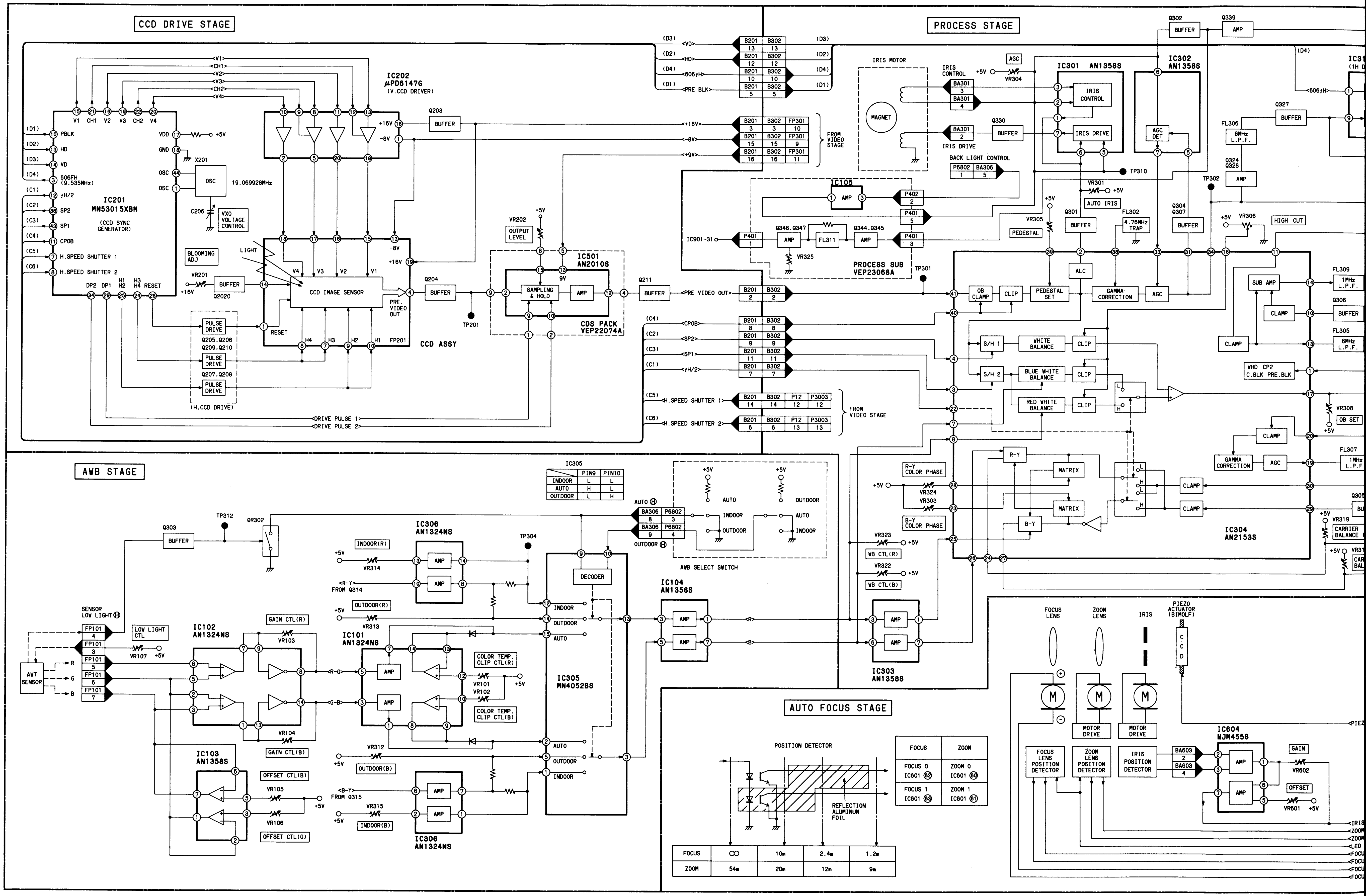

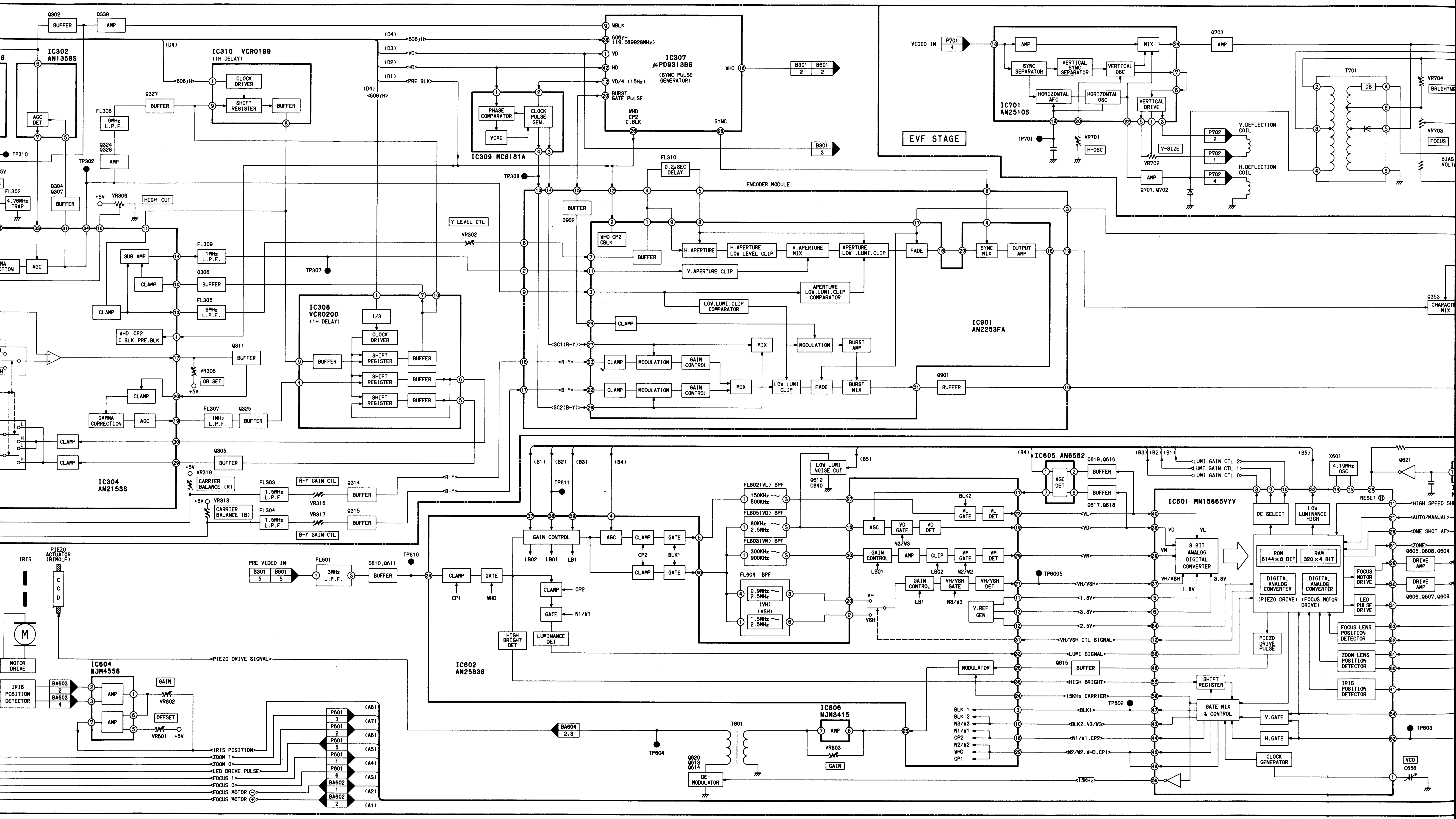

IC302 AN1358S
IC310 VCR0199 (1H DELAY)
CLOCK DRIVER
SHIFT REGISTER
BUFFER
IC307 μPD9313BG (SYNC PULSE GENERATOR)
WBLK
606fH (19.069928MHz)
VD
HD
VD/4 (15Hz)
BURST GATE PULSE
WHD CP2 C.BLK
SYNC
B301 B601
IC309 MC8181A
PHASE COMPARATOR
CLOCK PULSE GEN.
VCXO
TP310
TP302
TP308
TP307
FL302 4.76MHz TRAP
FL306 6MHz L.P.F.
FL309 1MHz L.P.F.
FL305 6MHz L.P.F.
FL307 1MHz L.P.F.
FL310 0.2μSEC DELAY
HIGH CUT
SUB AMP
CLAMP
AGC
AGC DET
GAMMA CORRECTION
WHD CP2 C.BLK PRE.BLK
VR308 OB SET
IC308 VCR0200 (1H DELAY)
1/3
IC304 AN2153S
VR319 CARRIER BALANCE (R)
VR318 CARRIER BALANCE (B)
FL303 1.5MHz L.P.F.
FL304 1.5MHz L.P.F.
R-Y GAIN CTL
B-Y GAIN CTL
VR316
VR317
Y LEVEL CTL
VR302
ENCODER MODULE
WHD CP2 CBLK
H.APERTURE
H.APERTURE LOW LEVEL CLIP
V.APERTURE MIX
APERTURE LOW LUMI.CLIP
FADE
SYNC MIX
OUTPUT AMP
V.APERTURE CLIP
APERTURE LOW.LUMI.CLIP COMPARATOR
LOW.LUMI.CLIP COMPARATOR
IC901 AN2253FA
MODULATION
GAIN CONTROL
MIX
BURST AMP
LOW LUMI CLIP
BURST MIX
Q901 BUFFER
EVF STAGE
VIDEO IN
P701
IC701 AN2510S
SYNC SEPARATOR
VERTICAL SYNC SEPARATOR
VERTICAL OSC
HORIZONTAL AFC
HORIZONTAL OSC
VERTICAL DRIVE
TP701
VR701 H-OSC
VR702 V-SIZE
P702
V.DEFLECTION COIL
H.DEFLECTION COIL
Q701, Q702
T701
VR704 BRIGHTNESS
VR703 FOCUS
BIAS VOLTAGE
Q353 CHARACTER MIX
PIEZO ACTUATOR (BIMOLF)
IRIS
MOTOR DRIVE
IRIS POSITION DETECTOR
IC604 NJM4558
BA603
GAIN
VR602
OFFSET
VR601
PIEZO DRIVE SIGNAL
IRIS POSITION
ZOOM 1
ZOOM 0
LED DRIVE PULSE
FOCUS 1
FOCUS 0
FOCUS MOTOR ⊖
FOCUS MOTOR ⊕
P601
BA602
PRE VIDEO IN
FL601 3MHz L.P.F.
Q610, Q611
TP610
IC602 AN2583S
GAIN CONTROL
LB02 LB01 LB1
CP2
BLK1
N1/W1
LUMINANCE DET
HIGH BRIGHT DET
LOW LUMI NOISE CUT
Q612 C640
FL602(VL) BPF 150KHz ~ 600KHz
FL605(VD) BPF 80KHz ~ 2.5MHz
FL603(VM) BPF 300KHz ~ 900KHz
FL604 BPF 0.9MHz ~ 2.5MHz (VH) (VSH) 1.5MHz ~ 2.5MHz
VL GATE
VL DET
VD GATE
VD DET
N3/W3
CLIP
VM GATE
VM DET
N2/W2
VH/VSH GATE
VH/VSH DET
V.REF GEN
TP6005
MODULATOR
BA604 2.3
TP604
T601
Q620 Q613 Q614
DE-MODULATOR
IC606 NJM3415
VR603 GAIN
BLK 1
BLK 2
N3/W3
N1/W1
CP2
N2/W2
WHD
CP1
TP602
IC605 AN6562
Q619, Q616
Q617, Q618
LUMI GAIN CTL 2
LUMI GAIN CTL 1
LUMI GAIN CTL 0
X601 4.19MHz OSC
Q621
RESET
IC601 MN15865VYV
DC SELECT
LOW LUMINANCE HIGH
8 BIT ANALOG DIGITAL CONVERTER
ROM 6144×8 BIT
RAM 320×4 BIT
DIGITAL ANALOG CONVERTER (PIEZO DRIVE)
DIGITAL ANALOG CONVERTER (FOCUS MOTOR DRIVE)
PIEZO DRIVE PULSE
SHIFT REGISTER
GATE MIX & CONTROL
V.GATE
H.GATE
CLOCK GENERATOR
FOCUS MOTOR DRIVE
LED PULSE DRIVE
FOCUS LENS POSITION DETECTOR
ZOOM LENS POSITION DETECTOR
IRIS POSITION DETECTOR
HIGH SPEED SHUTTER
AUTO/MANUAL
ONE SHOT AF
ZONE
Q605, Q608, Q604
DRIVE AMP
Q606, Q607, Q609
TP603
VCO
C656

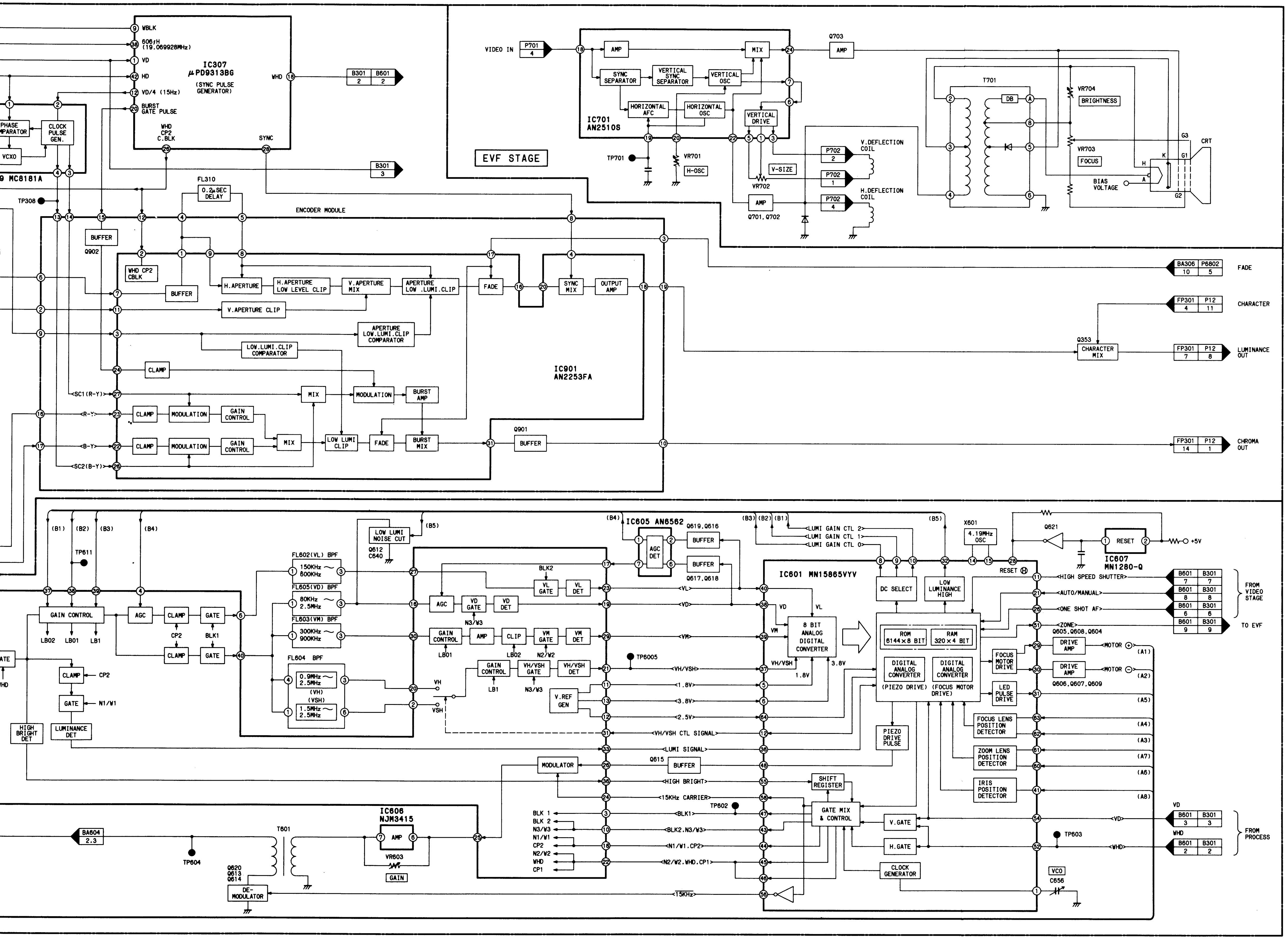

Next Page:
POWER SUPPLY & SYSTEM CONTROL Section

3-2. POWER SUPPLY BLOCK DIAGRAM

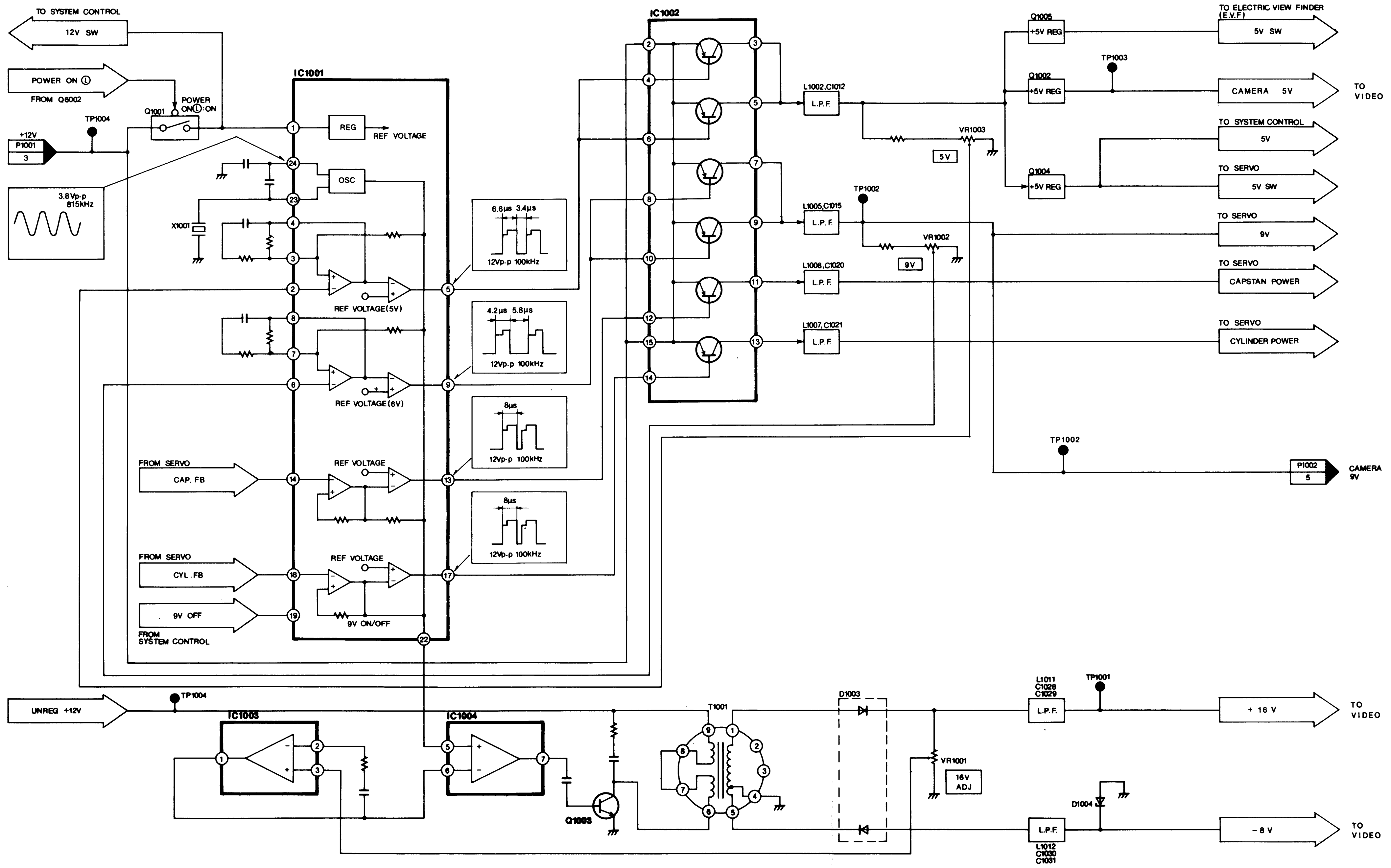

3-3. SYSTEM CONTROL BLOCK DIAGRAM

MICROCOMPUTER I/O CHART
(IC6001: MN15361VYF)

PIN	I/O	NAME/OPERATION
1	OUT	LOAD Ⓗ
2	OUT	UNLOAD Ⓗ
3	IN	HQ
4	OUT	REC DATA
5	OUT	NON REC DATA
6	OUT	SCAN OUT
7	OUT	SCAN OUT
8	OUT	ROS 2
9	IN	ROS 1
10	—	VSS
11	—	NOT USED
12	—	NOT USED
13	OUT	SCAN OUT
14	IN	OSC 1
15	OUT	OSC 2
16	OUT	SCAN OUT
17	OUT	REC LED Ⓛ
18	OUT	PLAY LED Ⓛ
19	OUT	FF LED Ⓛ
20	OUT	REW LED Ⓛ
21	OUT	POWER LED Ⓛ
22	—	NOT USED
23	—	NOT USED
24	OUT	STAND-BY LED Ⓛ
25	OUT	PAUSE LED Ⓛ
26	OUT	INSERT LED Ⓛ
27	—	NOT USED
28	—	NOT USED
29	IN	IRQ
30	OUT	SERIAL CLOCK OUT
31	IN/OUT	SERILA DATA IN/OUT
32	IN	RESET Ⓛ
33	OUT	TRACKING DOWN
34	OUT	TRACKING UP
35	OUT	SERIAL CLOCK
36	OUT	SERIAL DATA
37	OUT	POWER ON Ⓗ
38	OUT	POWER SAVE Ⓗ
39	OUT	CAMERA POWER ON Ⓗ
40	OUT	COMMON
41	—	NOT USED
42	—	NOT USED
43	IN	OUT Ⓗ/AWT Ⓜ/IN Ⓛ
44	IN	DEW SENSOR Ⓛ
45	IN	SW 1
46	IN	REEL SENSOR
47	IN	SCAN IN
48	IN	SCAN IN
49	IN	SCAN IN
50	IN	SCAN IN
51	IN	SCAN IN
52	IN	SCAN IN
53	—	VDD
54	IN	SCAN IN
55	OUT	CLOCK OUT
56	OUT	EE Ⓗ/VV Ⓛ
57	OUT	PLAY Ⓛ
58	OUT	AUDIO EE Ⓗ
59	OUT	AUDIO MUTE Ⓗ
60	OUT	SHUTTER 1
61	OUT	SHUTTER 2
62	OUT	TARRY Ⓛ
63	IN	V REF 1
64	—	NOT USED
65	—	NOT USED
66	IN	TAKE UP PHOTO
67	IN	SUPPLY PHOTO
68	IN	POWER SW ON Ⓛ
69	IN	POWER OFF Ⓛ
70	OUT	VIDEO DELAYED REC Ⓛ
71	OUT	AUDIO DELAYED REC Ⓛ
72	OUT	ROTARY ERASE Ⓛ
73	OUT	SENSOR LED
74	IN	V REF 2
75	OUT	CONTROL DUTY Ⓛ
76	OUT	CYLINDER ON Ⓗ
77	OUT	FULL ERASE Ⓗ
78	OUT	SP Ⓗ
79	OUT	REV Ⓗ/FWD Ⓜ/STOP Ⓛ
80	OUT	REC Ⓗ/P.B Ⓜ/MEMORY Ⓛ
81	OUT	V 0
82	OUT	V 1
83	—	NOT USED
84	—	NOT USED

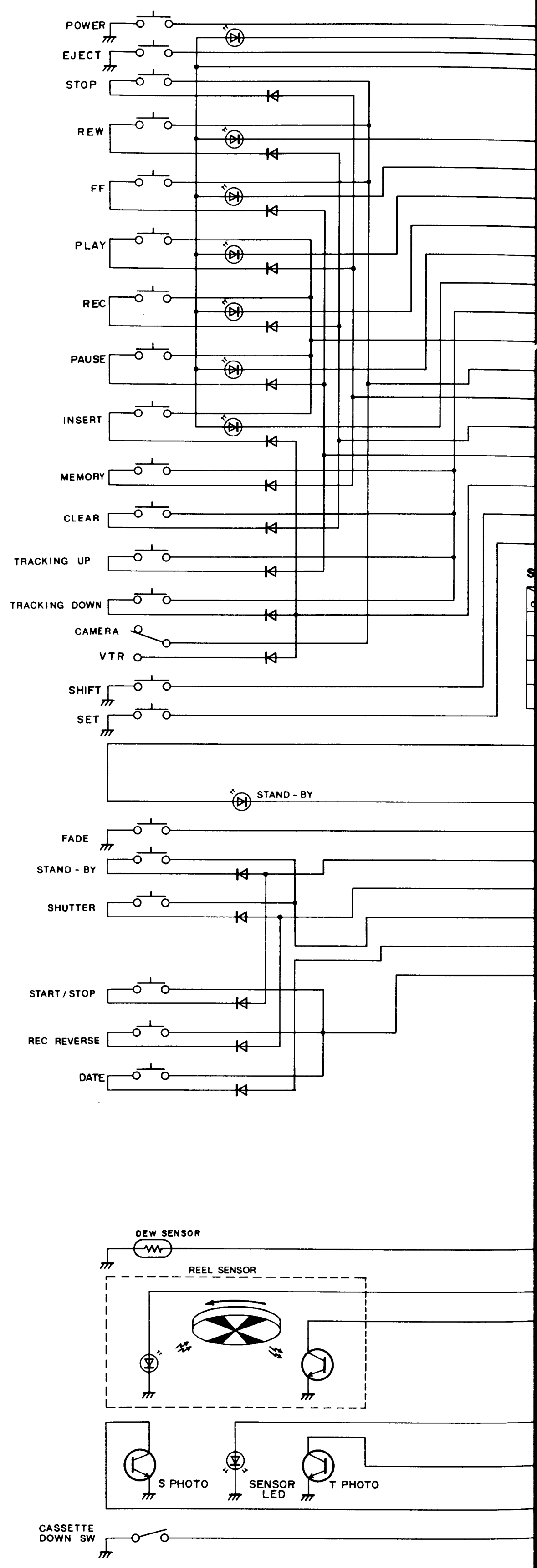

OL BLOCK DIAGRAM

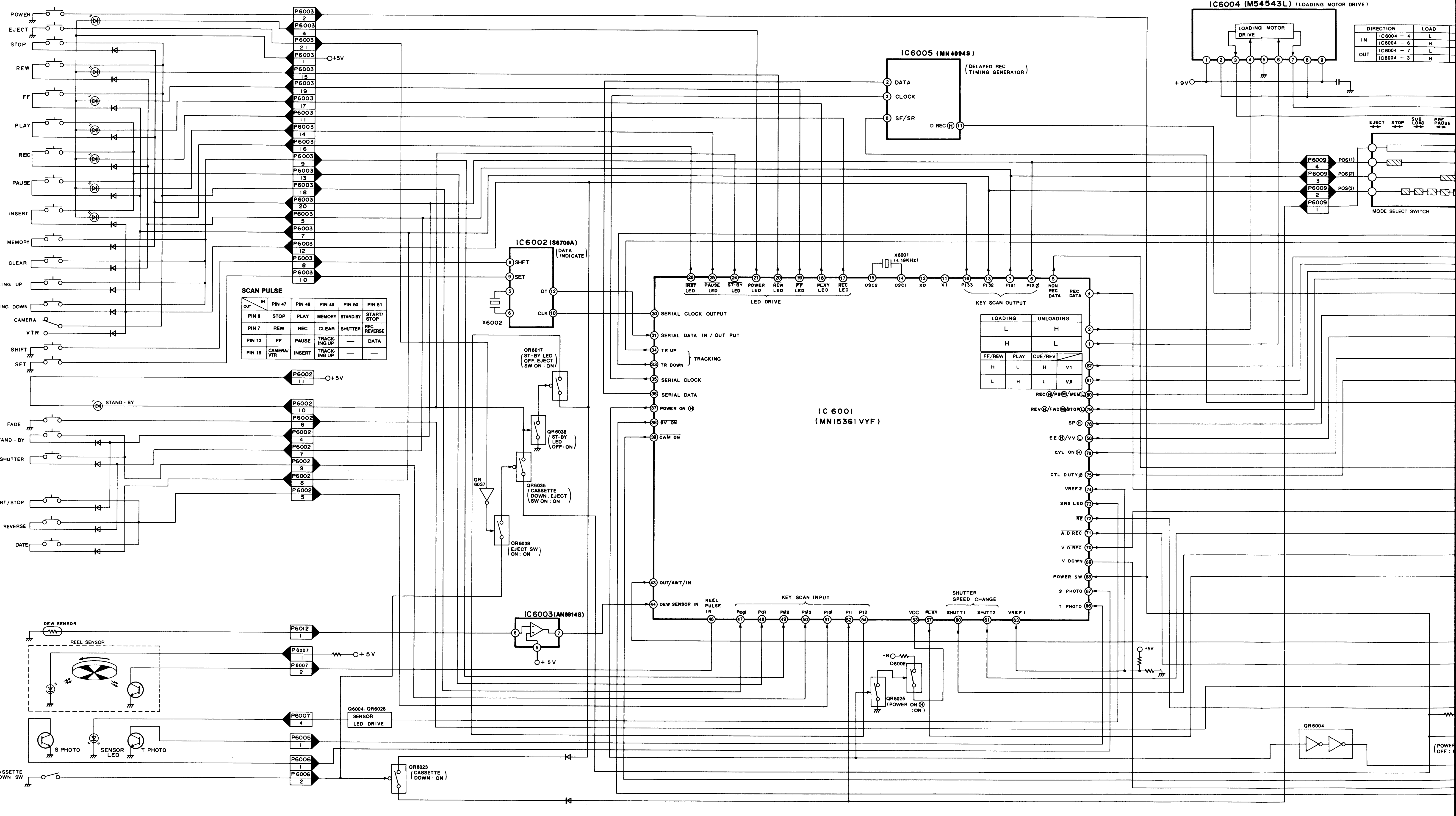

SCAN PULSE

OUT \ IN	PIN 47	PIN 48	PIN 49	PIN 50	PIN 51
PIN 6	STOP	PLAY	MEMORY	STAND-BY	START/ STOP
PIN 7	REW	REC	CLEAR	SHUTTER	REC REVERSE
PIN 13	FF	PAUSE	TRACK-ING UP	—	DATA
PIN 16	CAMERA/ VTR	INSERT	TRACK-ING UP	—	—

DIRECTION		LOAD
IN	IC6004 – 4	L
	IC6004 – 6	H
OUT	IC6004 – 7	L
	IC6004 – 3	H

LOADING	UNLOADING
L	H
H	L

FF/REW	PLAY	CUE/REV	
H	L	H	V1
L	H	L	VØ

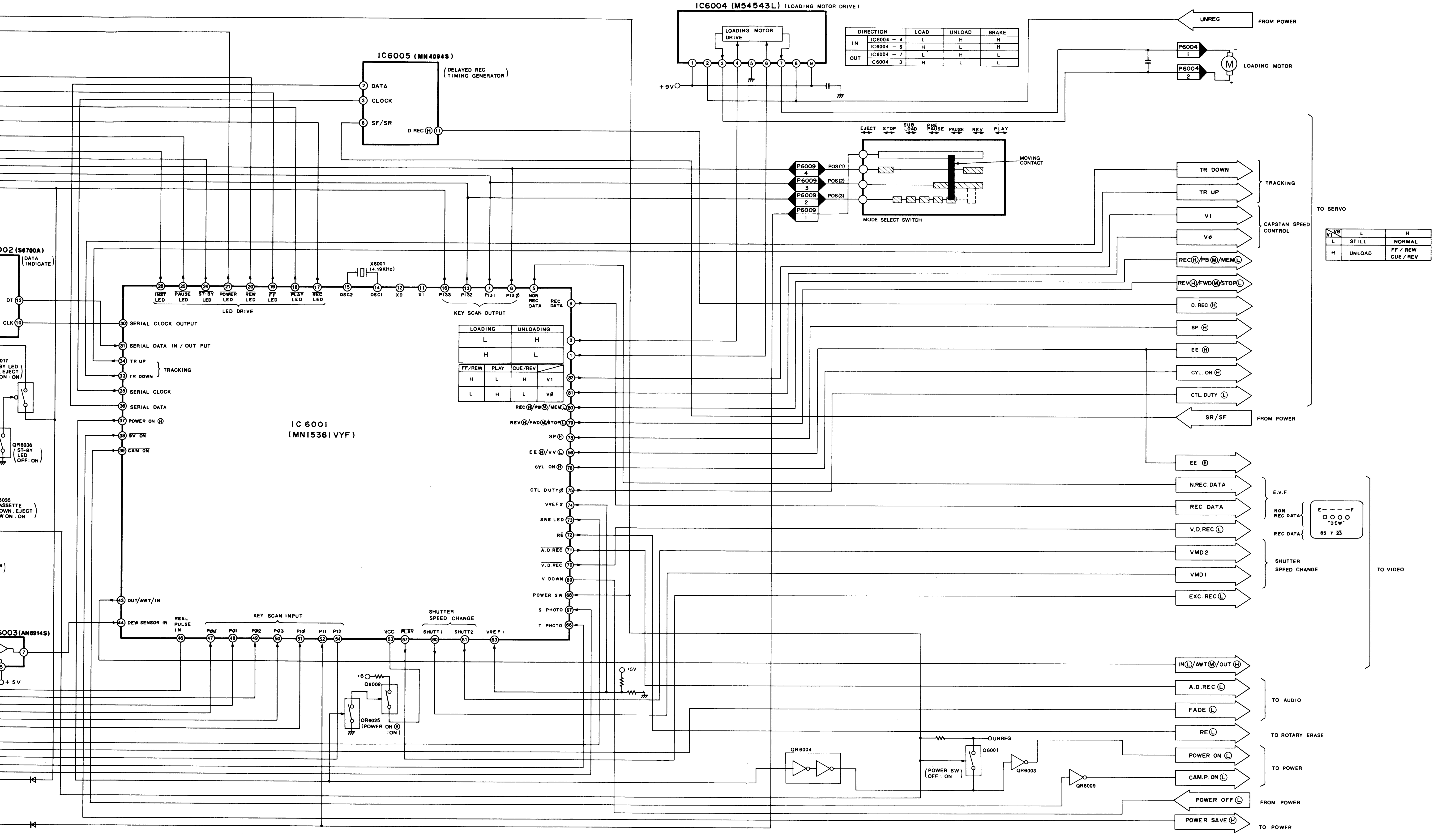
IC6004 (M54543L) (LOADING MOTOR DRIVE)
LOADING MOTOR DRIVE
DIRECTION
LOAD
UNLOAD
BRAKE
IN
OUT
IC6004 - 4
IC6004 - 6
IC6004 - 7
IC6004 - 3
UNREG
FROM POWER
P6004
LOADING MOTOR
+9V
IC6005 (MN4094S)
(DELAYED REC TIMING GENERATOR)
DATA
CLOCK
SF/SR
D REC Ⓗ
EJECT
STOP
SUB LOAD
PRE PAUSE
PAUSE
REV
PLAY
MOVING CONTACT
P6009
POS(1)
POS(2)
POS(3)
MODE SELECT SWITCH
TR DOWN
TR UP
TRACKING
VI
Vø
CAPSTAN SPEED CONTROL
TO SERVO
STILL
NORMAL
UNLOAD
FF / REW CUE / REV
REC Ⓗ/PB Ⓜ/MEM Ⓛ
REV Ⓗ/FWD Ⓜ/STOP Ⓛ
D. REC Ⓗ
SP Ⓗ
EE Ⓗ
CYL. ON Ⓗ
CTL. DUTY Ⓛ
SR/SF
FROM POWER
X6001 (4.19KHz)
INST LED
PAUSE LED
ST-BY LED
POWER LED
REW LED
FF LED
PLAY LED
REC LED
LED DRIVE
OSC2
OSC1
XO
XI
PI33
PI32
PI31
PI3Ø
NON REC DATA
REC DATA
KEY SCAN OUTPUT
LOADING
UNLOADING
FF/REW
PLAY
CUE/REV
SERIAL CLOCK OUTPUT
SERIAL DATA IN / OUT PUT
TR UP
TR DOWN
TRACKING
SERIAL CLOCK
SERIAL DATA
POWER ON Ⓗ
9V ON
CAM ON
IC 6001 (MN15361 VYF)
OUT/AWT/IN
DEW SENSOR IN
REEL PULSE IN
KEY SCAN INPUT
PØØ
PØ1
PØ2
PØ3
P1Ø
P11
P12
VCC
PLAY
SHUTT1
SHUTT2
SHUTTER SPEED CHANGE
VREF I
SP Ⓗ
EE Ⓗ/VV Ⓛ
CYL ON Ⓗ
CTL DUTY Ø
VREF 2
SNS LED
RE
A.D.REC
V.D.REC
V DOWN
POWER SW
S PHOTO
T PHOTO
DT
CLK
002 (S6700A)
(DATA INDICATE)
QR6036 ST-BY LED (OFF: ON)
003 (AN6914S)
+5V
+B
Q6002
QR6025 (POWER ON Ⓗ :ON)
N.REC.DATA
REC DATA
V.D.REC Ⓛ
VMD 2
VMD 1
EXC. REC Ⓛ
E.V.F.
NON REC DATA
REC DATA
SHUTTER SPEED CHANGE
TO VIDEO
"DEW"
IN Ⓛ/AWT Ⓜ/OUT Ⓗ
A.D.REC Ⓛ
FADE Ⓛ
TO AUDIO
RE Ⓛ
TO ROTARY ERASE
QR6004
UNREG
Q6001
(POWER SW OFF : ON)
QR6003
QR6009
POWER ON Ⓛ
CAM.P.ON Ⓛ
TO POWER
POWER OFF Ⓛ
FROM POWER
POWER SAVE Ⓗ
TO POWER

3-4. SERVO BLOCK DIAGRAM

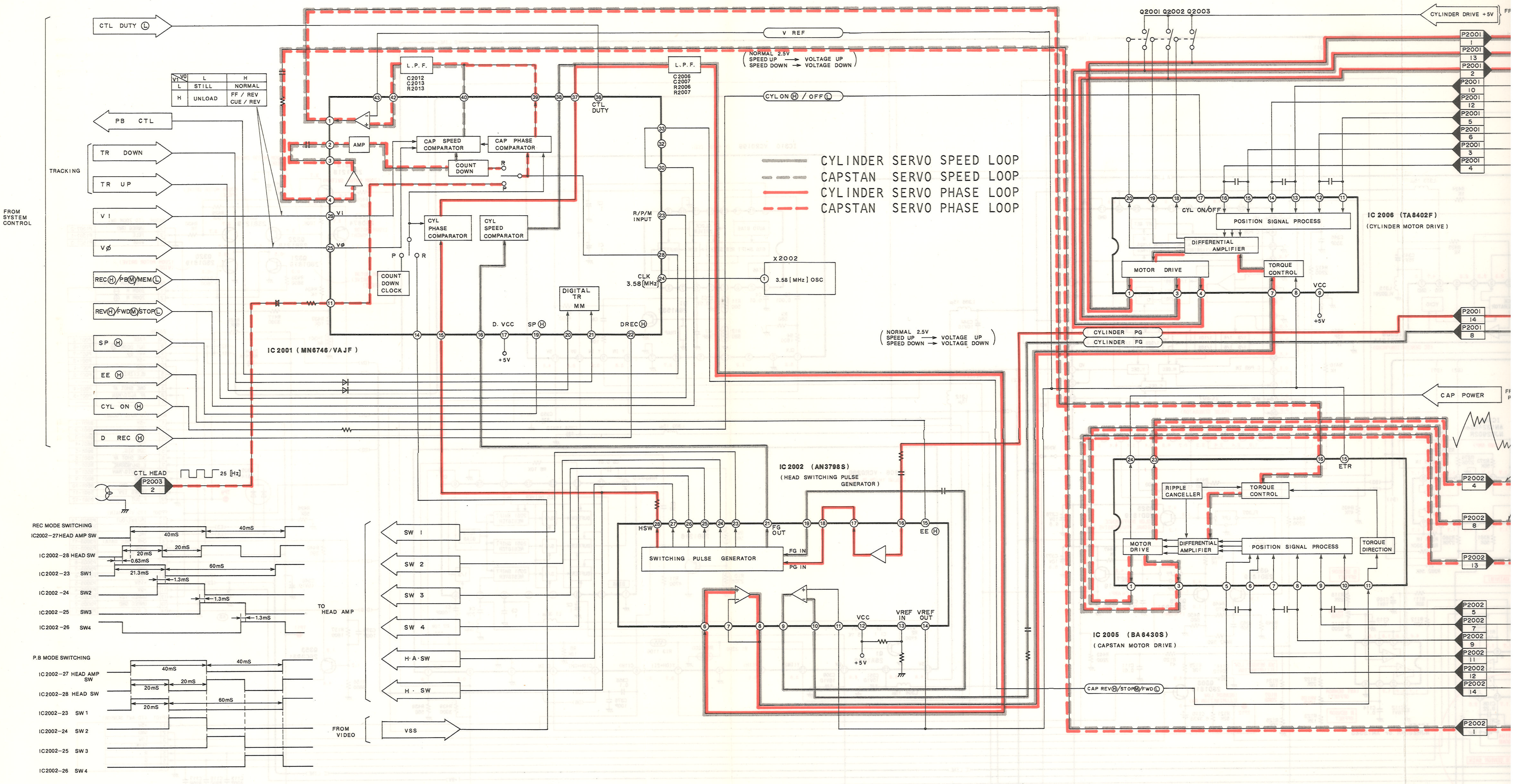

3-5. LUMINANCE & CHROMINANCE BLOCK DIAGRAM

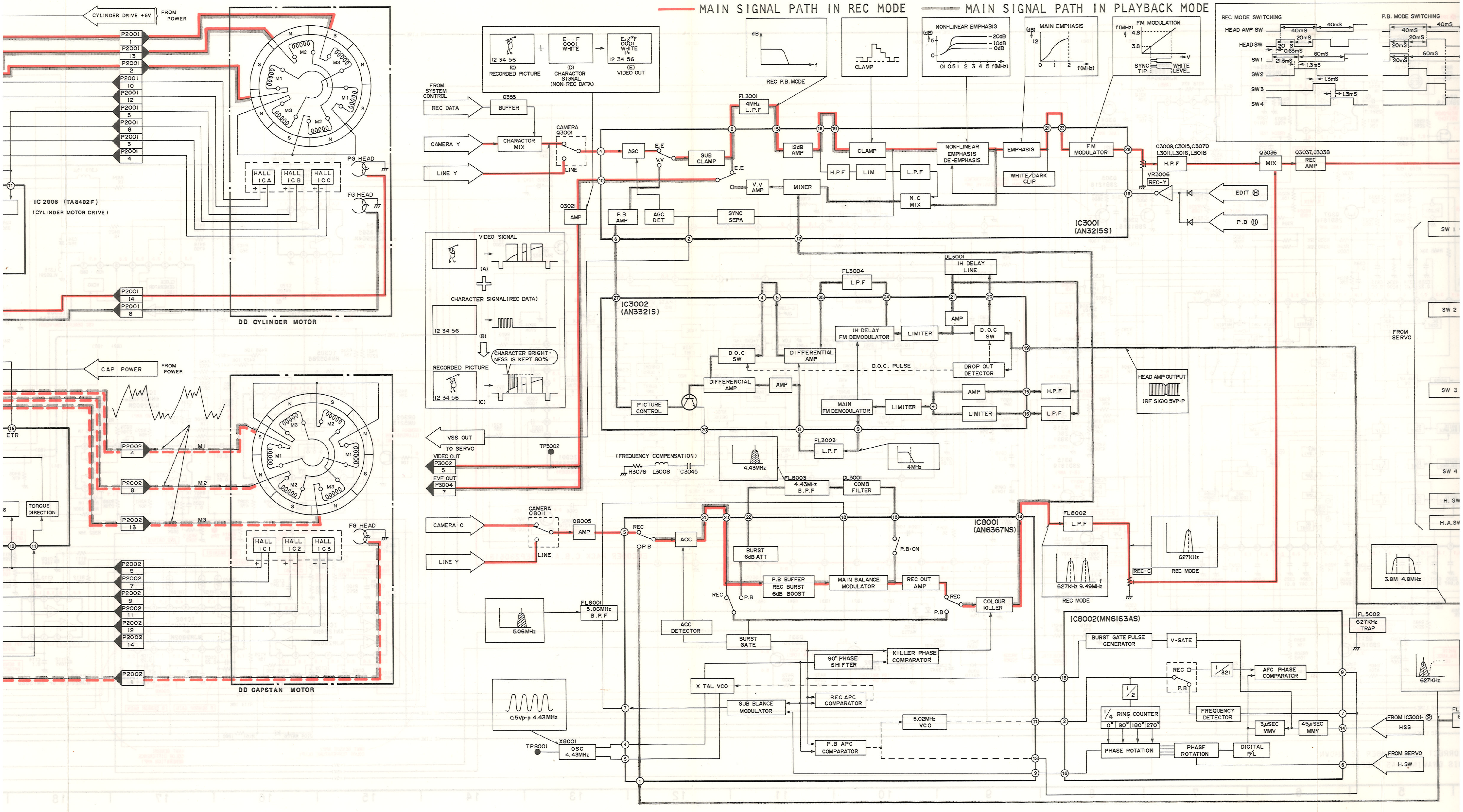

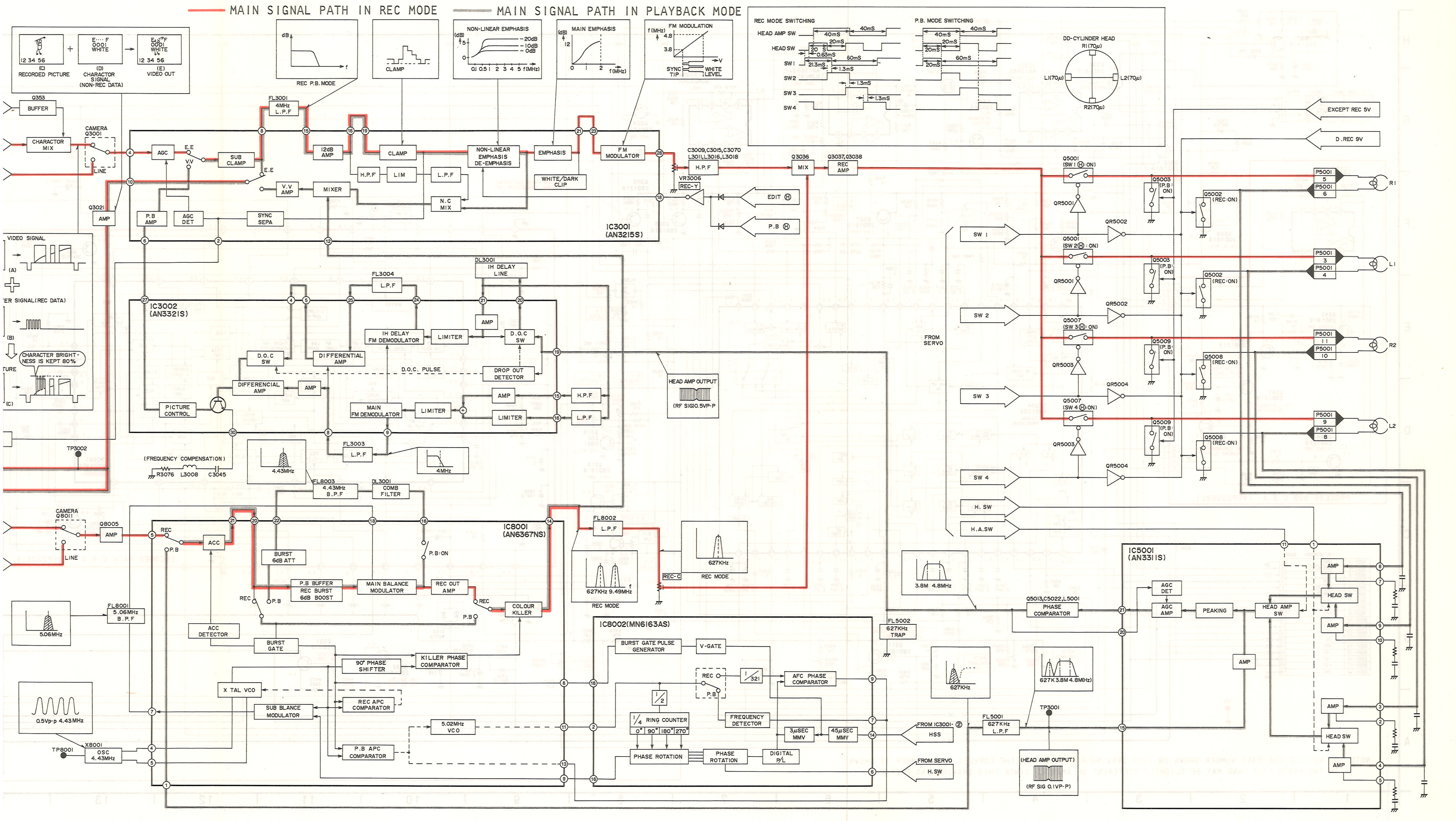

Next Page:
PROCESS, SUB PROCESS & ENCODER Section

3-6. PROCESS, SUB PROCESS & ENCODER SCHEMATIC DIAGRAM

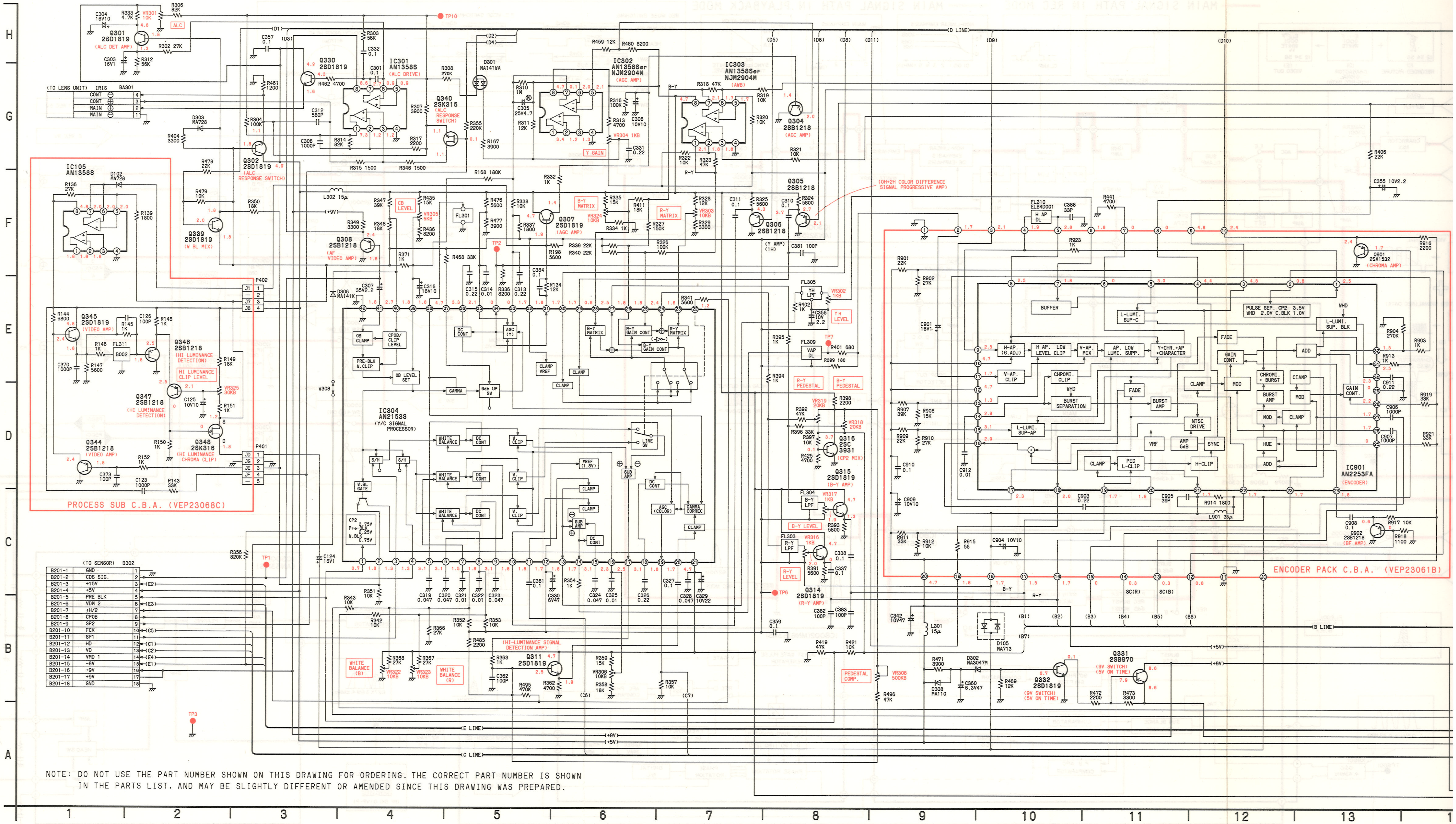

NOTE: DO NOT USE THE PART NUMBER SHOWN ON THIS DRAWING FOR ORDERING. THE CORRECT PART NUMBER IS SHOWN IN THE PARTS LIST. AND MAY BE SLIGHTLY DIFFERENT OR AMENDED SINCE THIS DRAWING WAS PREPARED.

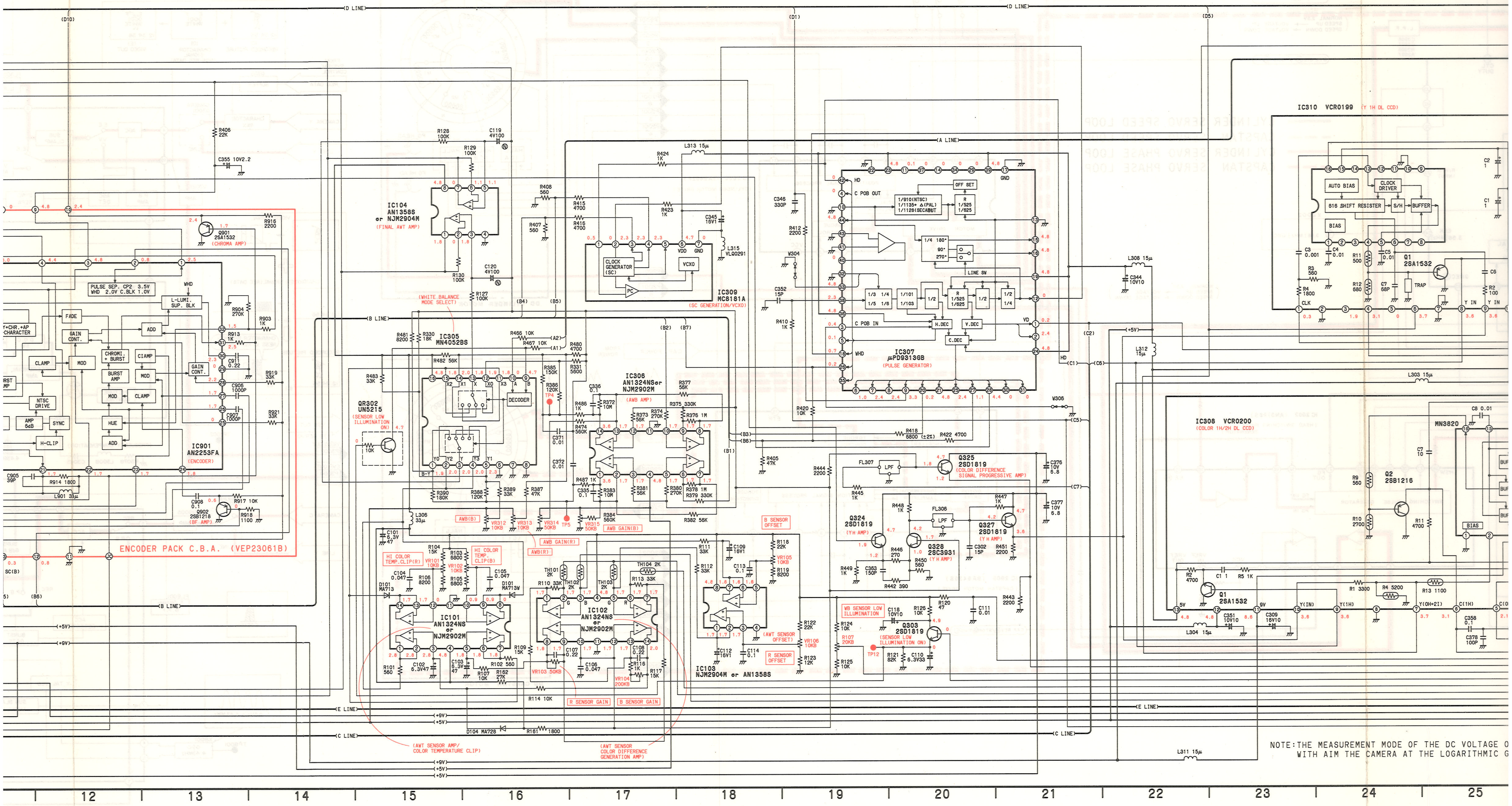
D LINE
A LINE
B LINE
C LINE
E LINE
IC104
AN1358S
or NJM2904M
(FINAL AWT AMP)
Q901
2SA1532
(CHROMA AMP)
PULSE SEP. CP2 3.5V
WHD 2.0V C.BLK 1.0V
L-LUMI.
SUP. BLK
FADE
GAIN
CONT.
CLAMP
MOD
CHROMI.
+ BURST
CIAMP
BURST
AMP
ADD
HUE
SYNC
H-CLIP
NTSC
DRIVE
IC901
AN2253FA
(ENCODER)
Q902
2SB1218
(BF AMP)
ENCODER PACK C.B.A. (VEP23061B)
IC305
MN4052BS
(WHITE BALANCE
MODE SELECT)
DECODER
QR302
UN5215
(SENSOR LOW
ILLUMINATION
ON)
IC306
AN1324NSor
NJM2902M
(AWB AMP)
CLOCK
GENERATOR
(SC)
VCXO
IC309
MC8181A
(SC GENERATION/VCXO)
IC307
μPD9313GB
(PULSE GENERATOR)
C POB OUT
C POB IN
OFF SET
LINE SW
H.DEC
V.DEC
C.DEC
Q325
2SD1819
(COLOR DIFFERENCE
SIGNAL PROGRESSIVE AMP)
Q324
2SD1819
(YH AMP)
Q327
2SD1819
(YH AMP)
Q328
2SC3931
(YH AMP)
Q303
2SD1819
(SENSOR LOW
ILLUMINATION ON)
WB SENSOR LOW
ILLUMINATION
IC101
AN1324NS
or
NJM2902M
IC102
AN1324NS
or
NJM2902M
IC103
NJM2904M or AN1358S
HI COLOR
TEMP.CLIP(R)
HI COLOR
TEMP.
CLIP(B)
AWB GAIN(R)
AWB GAIN(B)
R SENSOR GAIN
B SENSOR GAIN
B SENSOR
OFFSET
R SENSOR
OFFSET
(AWT SENSOR
OFFSET)
(AWT SENSOR AMP/
COLOR TEMPERATURE CLIP)
(AWT SENSOR
COLOR DIFFERENCE
GENERATION AMP)
IC310 VCR0199 (Y 1H DL CCD)
AUTO BIAS
CLOCK
DRIVER
816 SHIFT RESISTER
S/H
BUFFER
BIAS
Q1
2SA1532
IC308 VCR0200
(COLOR 1H/2H DL CCD)
Q2
2SB1216
MN3820
NOTE:THE MEASUREMENT MODE OF THE DC VOLTAGE O
WITH AIM THE CAMERA AT THE LOGARITHMIC G
12
13
14
15
16
17
18
19
20
21
22
23
24
25

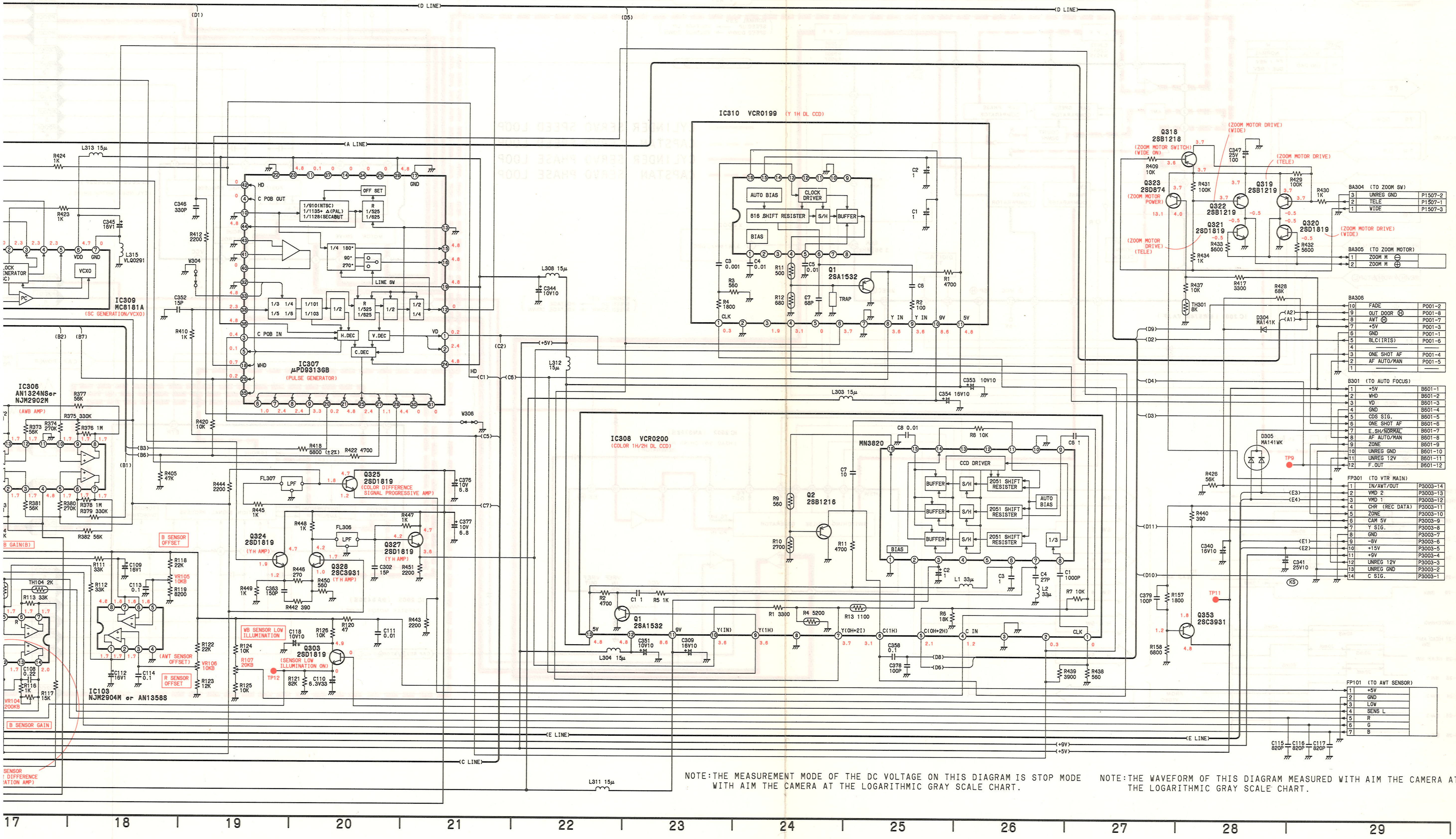

NOTE: THE MEASUREMENT MODE OF THE DC VOLTAGE ON THIS DIAGRAM IS STOP MODE WITH AIM THE CAMERA AT THE LOGARITHMIC GRAY SCALE CHART.

NOTE: THE WAVEFORM OF THIS DIAGRAM MEASURED WITH AIM THE CAMERA AT THE LOGARITHMIC GRAY SCALE CHART.

PROCESS MAIN CIRCUIT TP (Test Point) WAVE FORM (REF No. 300 Series)

3-7. PROCESS C.B.A. (VEP23063B), SUB PROCESS C.B.A. (VEP23068C) & ENCODER C.B.A. (VEP23061B)

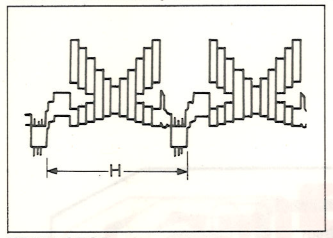

TP301 STOP
0.1V/20µsec. div. 0.35Vp-p

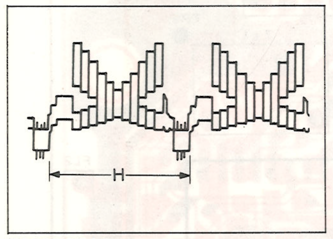

TP302 STOP
0.1V/20µsec. div. 0.3Vp-p

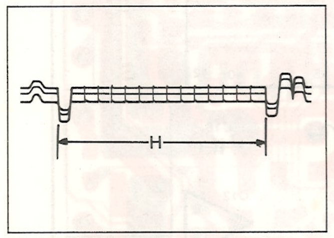

TP307 STOP
50mV/20µsec. div. 50mVp-p

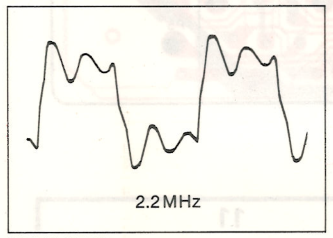

TP308 STOP
0.2V/50µsec. div. 8Vp-p

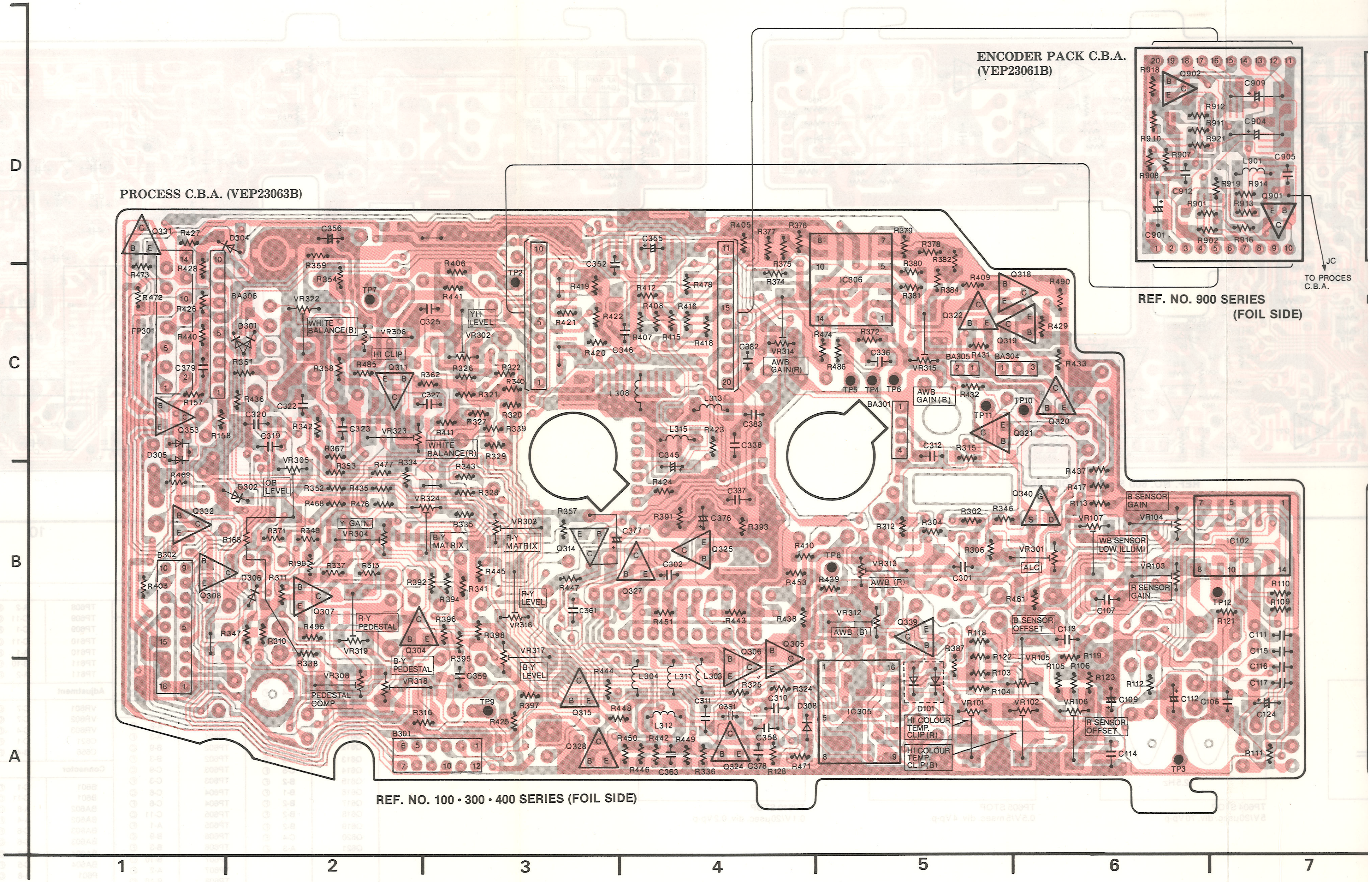

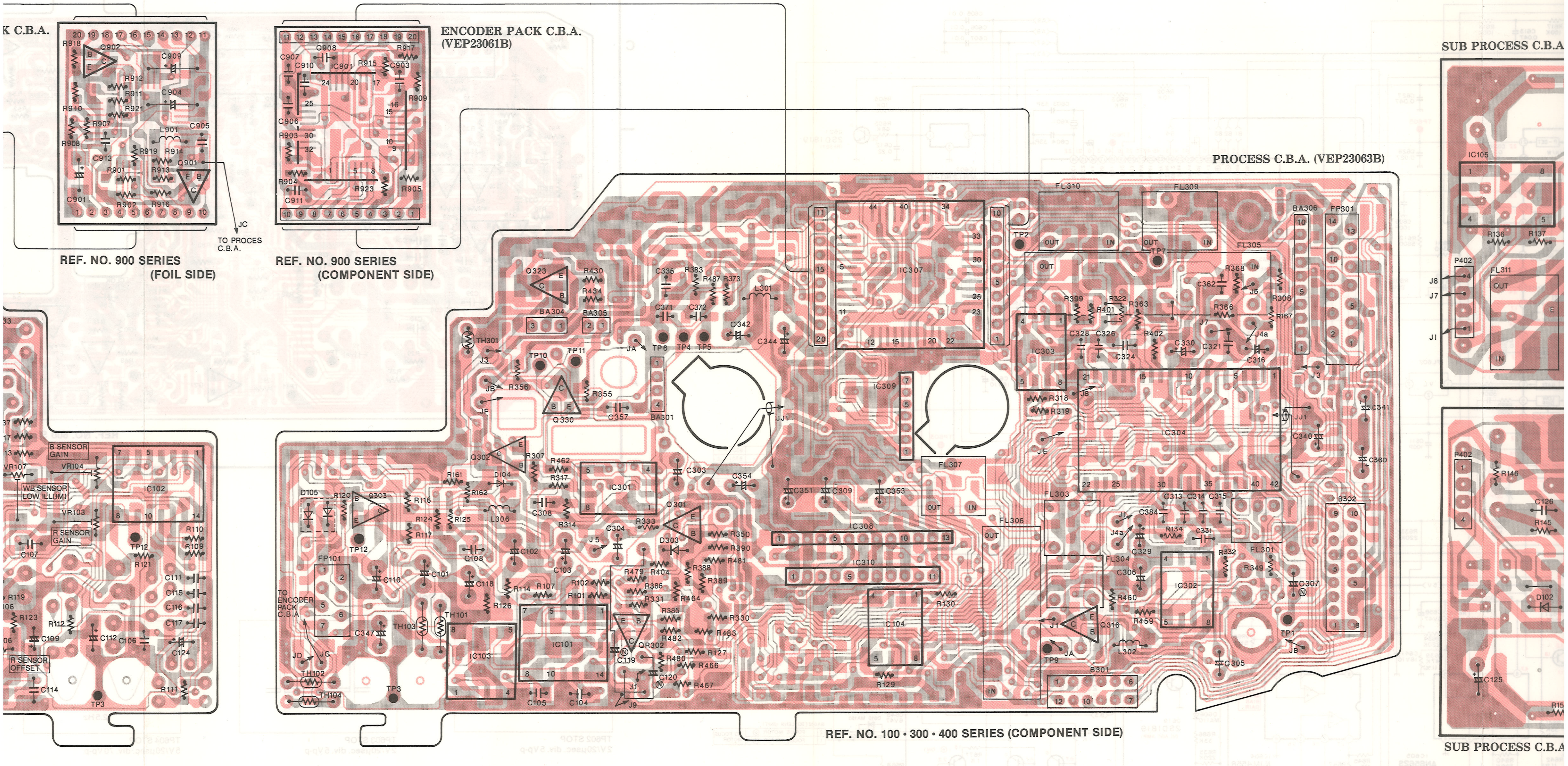

6 | 7 | 8 | 9 | 10 | 11 | 12 | 13 | 14

PROCESS C.B.A. (VEP23063B)

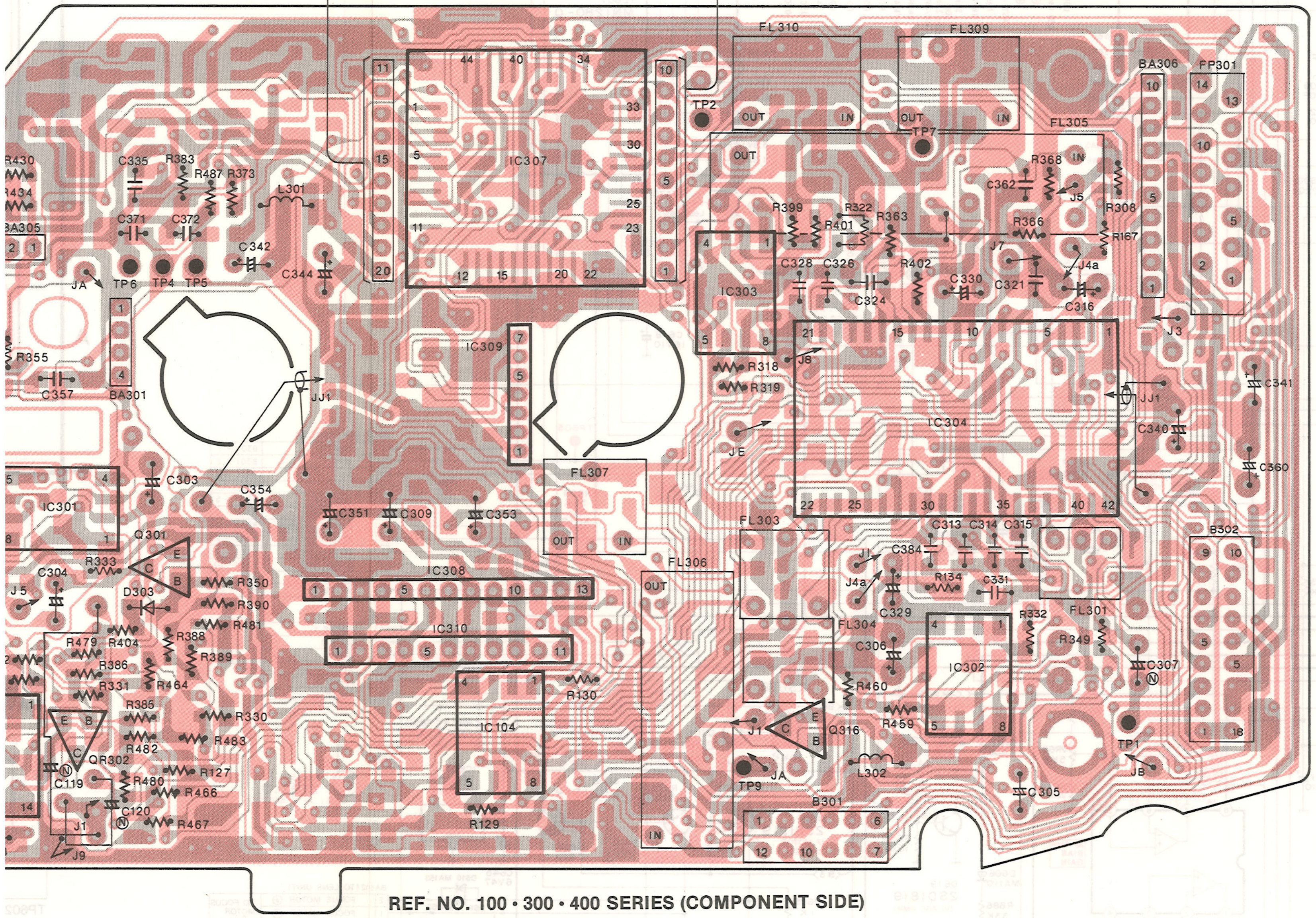

REF. NO. 100 • 300 • 400 SERIES (COMPONENT SIDE)

SUB PROCESS C.B.A. (VEP23068C)

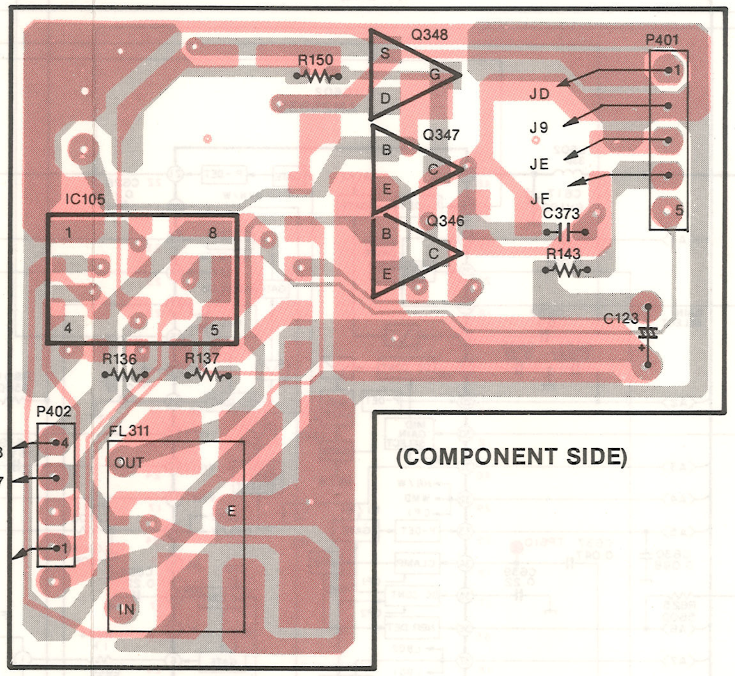

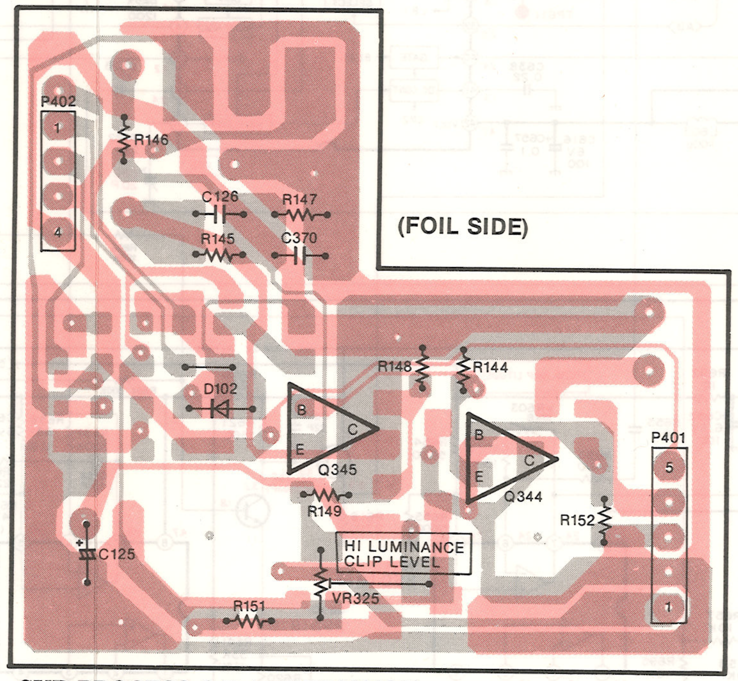

SUB PROCESS C.B.A. (VEP23068C)

9 10 11 12 13 14 15

PROCESS C.B.A. & ENCODER PACK C.B.A. & SUB PROCESS C.B.A.

Transistor		
Q301	B-9	Ⓒ
Q302	B-8	Ⓒ
Q303	B-8	Ⓒ
Q304	B-2	Ⓕ
Q305	B-4	Ⓕ
Q306	B-4	Ⓕ
Q307	B-2	Ⓕ
Q308	B-1	Ⓕ
Q311	C-2	Ⓕ
Q314	B-3	Ⓕ
Q315	A-3	Ⓕ
Q316	A-12	Ⓒ
Q318	C-6	Ⓕ
Q319	C-6	Ⓕ
Q320	C-6	Ⓕ
Q321	C-5	Ⓕ
Q322	C-5	Ⓕ
Q323	C-9	Ⓒ
Q324	A-4	Ⓕ
Q325	B-4	Ⓕ
Q327	B-4	Ⓕ
Q328	A-3	Ⓕ
Q330	C-9	Ⓒ
Q331	D-1	Ⓕ
Q332	B-1	Ⓕ
Q339	B-5	Ⓕ
Q340	B-6	Ⓕ
Q344	A-15	Ⓕ
Q345	A-14	Ⓕ
Q346	D-15	Ⓒ
Q347	D-15	Ⓒ
Q348	D-15	Ⓒ
Q353	C-1	Ⓕ
Q901	D-7	Ⓕ
Q902	D-6	Ⓕ
Transistor & Resistor		
QR302	A-9	Ⓒ
Integrated Circuit		
IC101	A-9	Ⓒ
IC102	B-7	Ⓕ
IC103	A-8	Ⓒ
IC104	A-11	Ⓒ
IC105	D-14	Ⓒ
IC301	B-9	Ⓒ
IC302	B-12	Ⓒ
IC303	C-11	Ⓒ
IC304	B-12	Ⓒ
IC305	A-5	Ⓕ
IC306	C-5	Ⓕ
IC307	C-11	Ⓒ
IC308	B-10	Ⓒ
IC309	C-11	Ⓒ
IC310	B-10	Ⓒ
IC901	D-8	Ⓒ
Test Point		
TP1	A-13	Ⓒ
TP2	C-11	Ⓒ
TP2	C-3	Ⓕ
TP3	A-8	Ⓒ
TP3	A-6	Ⓕ
TP4	C-9	Ⓒ
TP4	C-5	Ⓕ
TP5	A-10	Ⓒ
TP5	C-5	Ⓕ
TP6	C-9	Ⓒ
TP6	C-5	Ⓕ
TP7	C-12	Ⓒ
TP7	C-2	Ⓕ
TP8	B-5	Ⓕ
TP9	A-11	Ⓒ
TP9	A-3	Ⓕ
TP10	C-9	Ⓒ
TP10	C-6	Ⓕ
TP11	C-9	Ⓒ
TP11	C-5	Ⓕ
TP12	B-8	Ⓒ
TP12	B-7	Ⓕ
Adjustment		
VR101	A-5	Ⓕ
VR102	A-6	Ⓕ
VR103	B-6	Ⓕ
VR104	B-6	Ⓕ
VR105	A-6	Ⓕ
VR106	A-6	Ⓕ
VR107	B-6	Ⓕ
VR301	B-6	Ⓕ
VR302	C-3	Ⓕ
VR303	B-3	Ⓕ
VR304	B-2	Ⓕ
VR305	B-2	Ⓕ
VR306	C-2	Ⓕ
VR308	A-2	Ⓕ
VR312	B-5	Ⓕ
VR313	B-5	Ⓕ
VR314	C-4	Ⓕ
VR315	C-5	Ⓕ
VR316	B-3	Ⓕ
VR317	B-3	Ⓕ
VR318	A-2	Ⓕ
VR319	B-2	Ⓕ
VR322	C-2	Ⓕ
VR323	C-2	Ⓕ
VR324	B-3	Ⓕ
VR325	A-14	Ⓕ
Connector		
B301	A-12	Ⓒ
B301	A-2	Ⓕ
B302	B-13	Ⓒ
B302	B-1	Ⓕ
BA301	C-9	Ⓒ
BA304	C-9	Ⓒ
BA304	C-5	Ⓕ
BA305	C-9	Ⓒ
BA305	C-5	Ⓕ
BA306	D-13	Ⓒ
BA306	C-1	Ⓕ
FP301	D-13	Ⓒ
FP301	C-1	Ⓕ
P401	D-15	Ⓒ
P401	A-15	Ⓕ
P402	C-14	Ⓒ
P402	B-14	Ⓕ

ADDRESS INFORMATION
Ⓒ ··· COMPONENT SIDE
Ⓕ ··· FOIL SIDE

Next Page:
AUTO FOCUS Section

3-8. AUTO FOCUS SCHEMATIC DIAGRAM

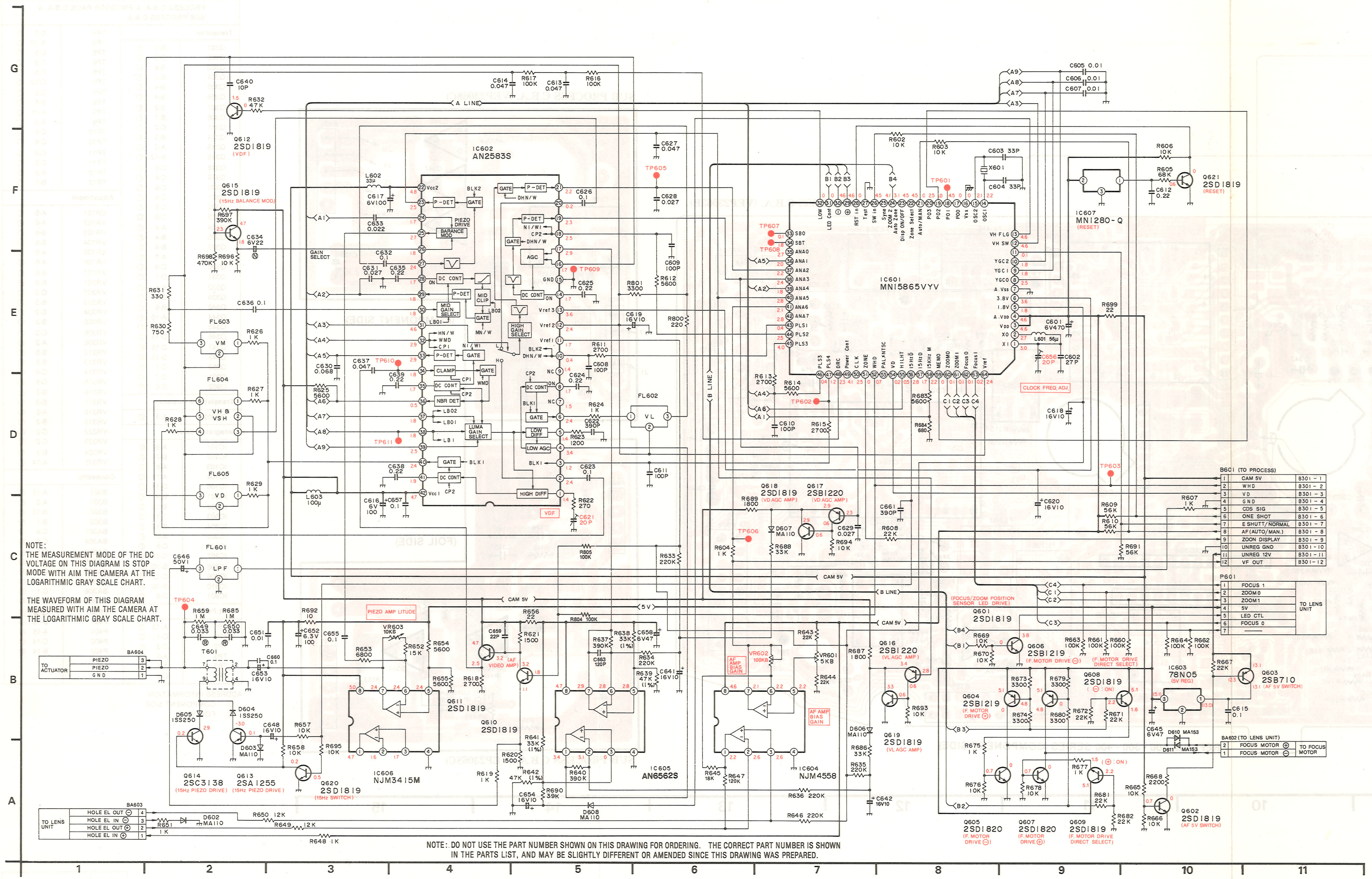

NOTE:
THE MEASUREMENT MODE OF THE DC VOLTAGE ON THIS DIAGRAM IS STOP MODE WITH AIM THE CAMERA AT THE LOGARITHMIC GRAY SCALE CHART.

THE WAVEFORM OF THIS DIAGRAM MEASURED WITH AIM THE CAMERA AT THE LOGARITHMIC GRAY SCALE CHART.

NOTE : DO NOT USE THE PART NUMBER SHOWN ON THIS DRAWING FOR ORDERING. THE CORRECT PART NUMBER IS SHOWN IN THE PARTS LIST, AND MAY BE SLIGHTLY DIFFERENT OR AMENDED SINCE THIS DRAWING WAS PREPARED.

3-9. AUTO FOCUS C.B.A. (VEP28015E)

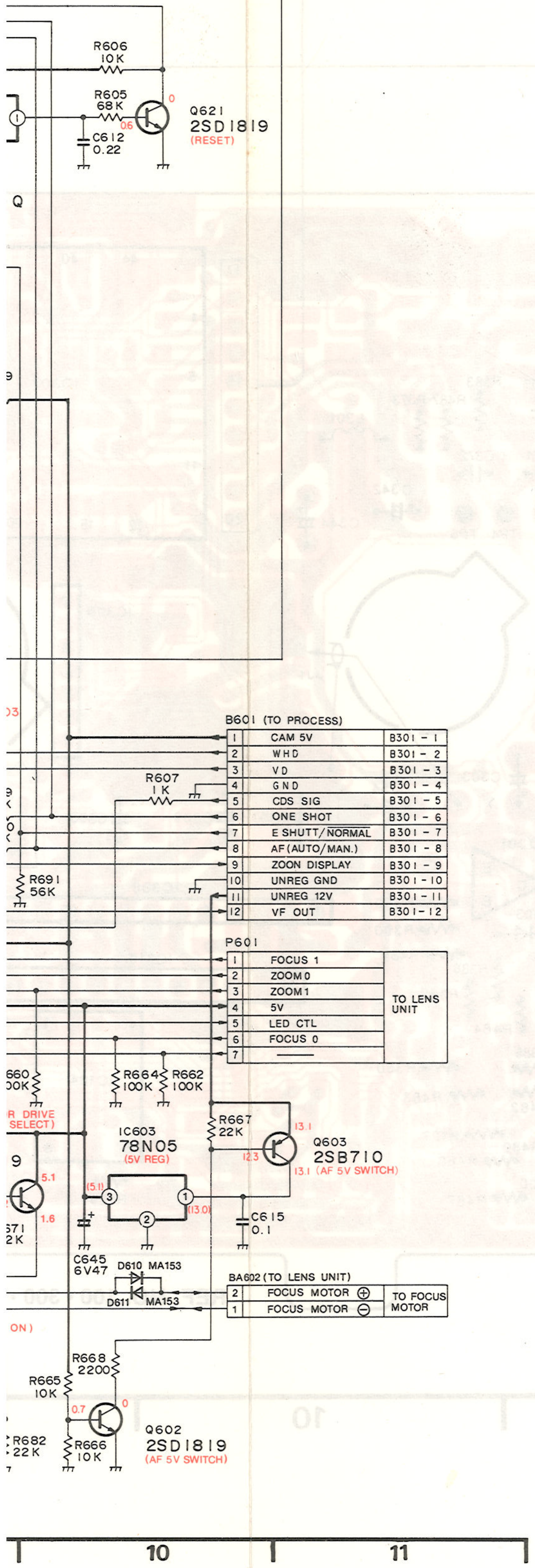

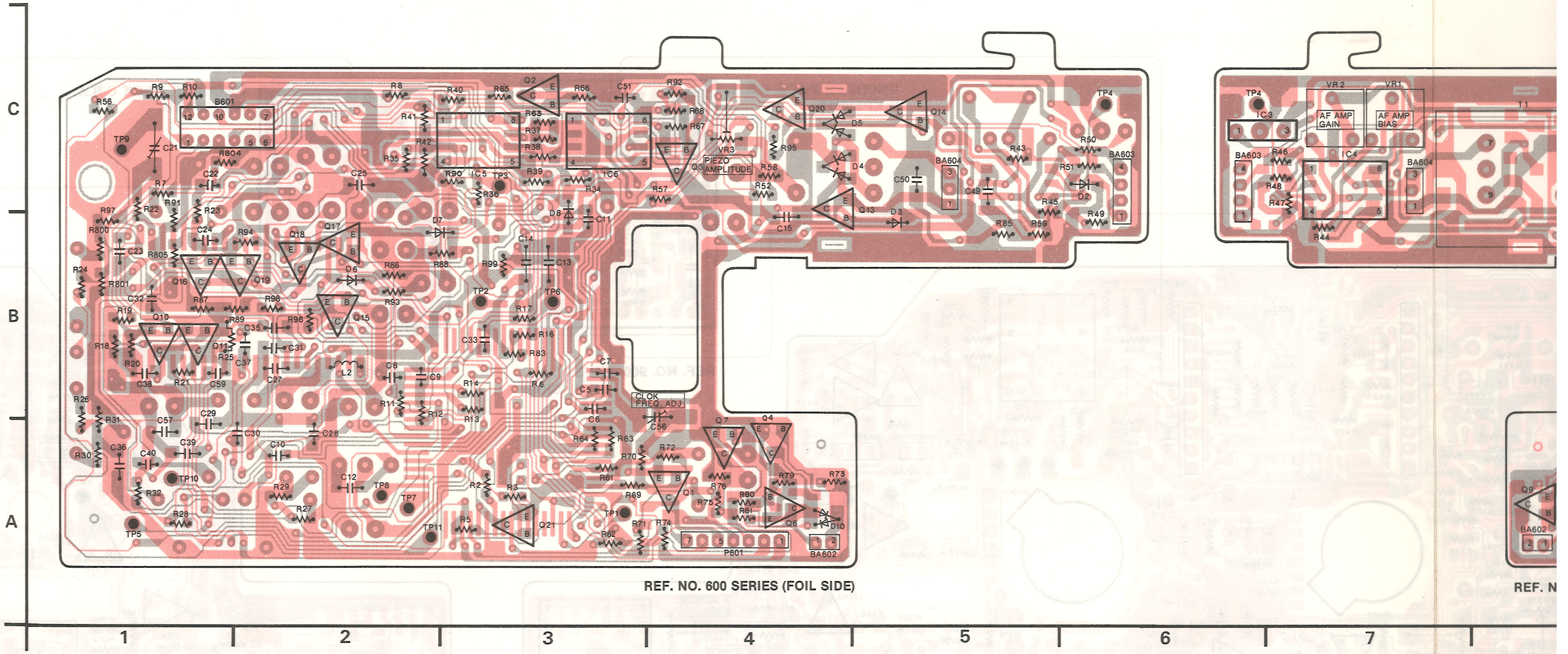

REF. NO. 600 SERIES (FOIL SIDE)

AUTO FOCUS CIRCUIT TP (Test Point)
WAVE FORM(REF No. 600 Series)

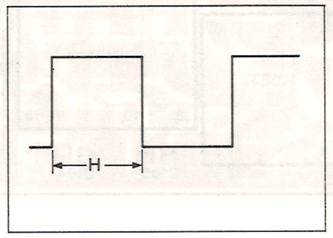

TP602 STOP
2V/20μsec. div. 5Vp-p

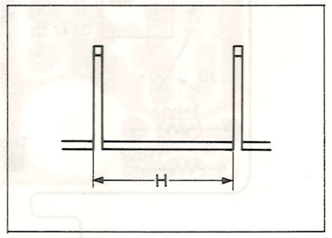

TP603 STOP
2V/20μsec. div. 5Vp-p

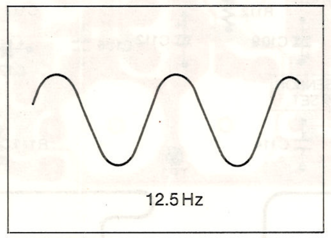

TP604 STOP
5V/20μsec. div. 70Vp-p

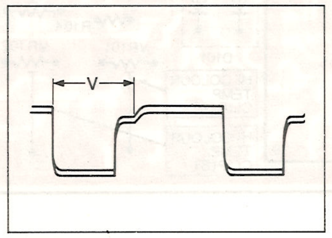

TP605 STOP
0.5V/5msec. div. 4Vp-p

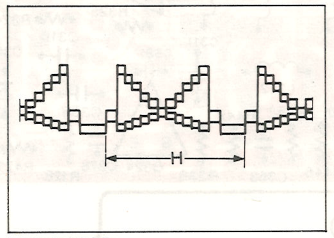

TP610 STOP
0.1V/20μsec. div. 0.2Vp-p

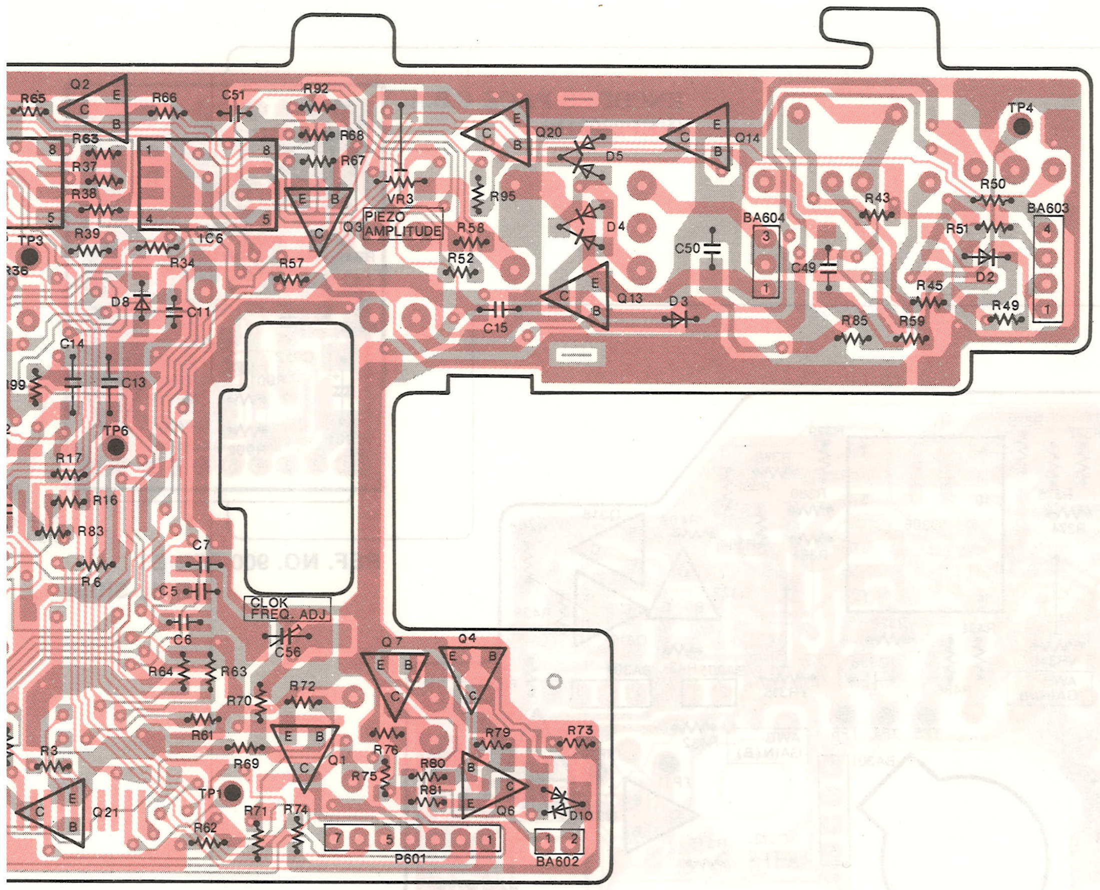

REF. NO. 600 SERIES (FOIL SIDE)

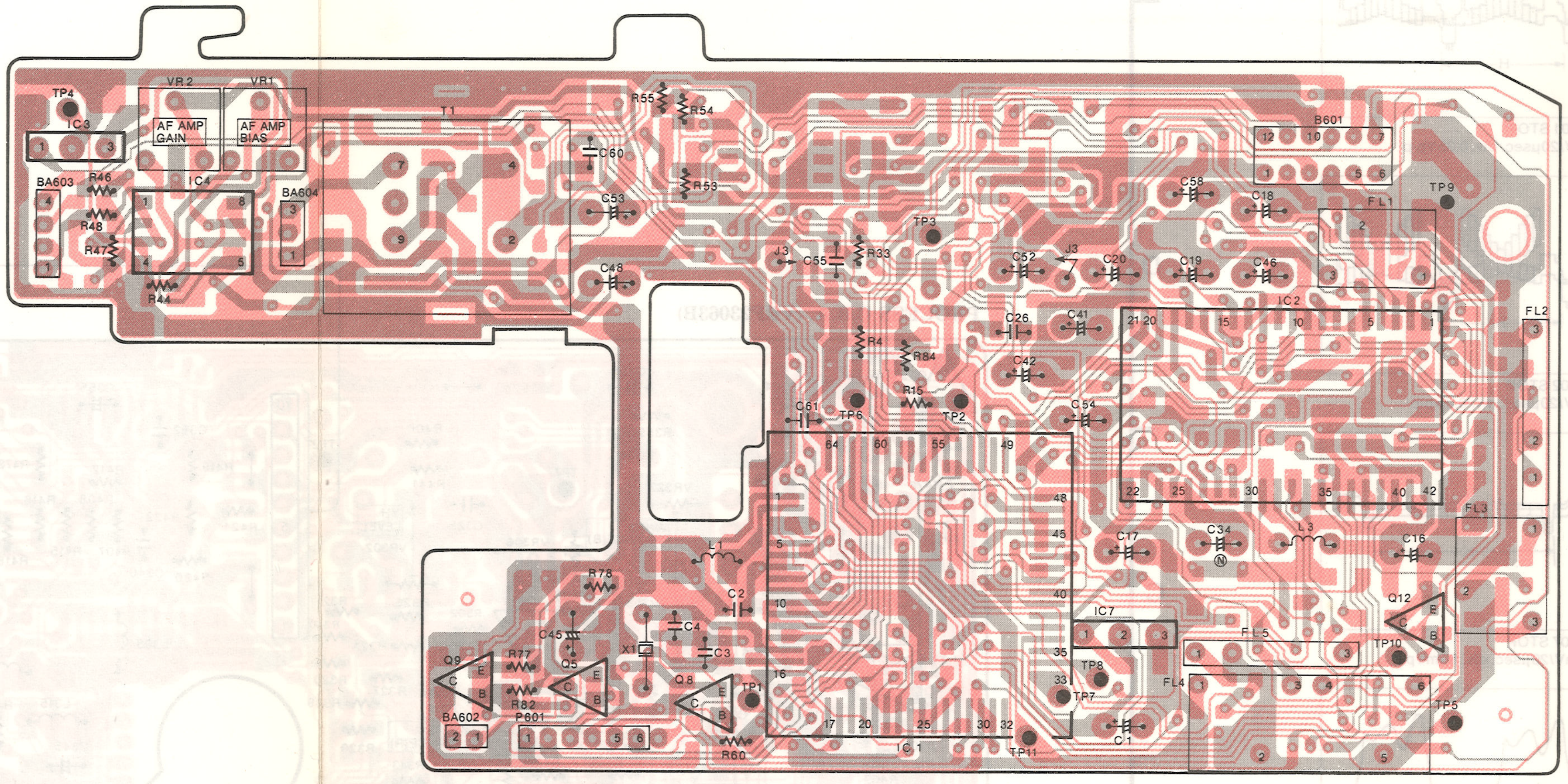

REF. NO. 600 SERIES (COMPONENT SIDE)

3 4 5 6 7 8 9 10 11

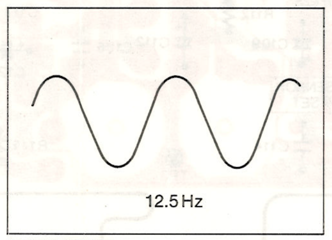

TP604 STOP
5 V/20 μsec. div. 70 Vp-p

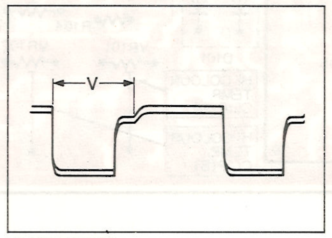

TP605 STOP
0.5 V/5 msec. div. 4 Vp-p

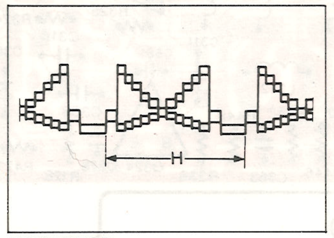

TP610 STOP
0.1 V/20 μsec. div. 0.2 Vp-p

AUTO FOCUS C.B.A.

Transistor	
Q601	A-4 Ⓕ
Q602	C-3 Ⓕ
Q603	C-4 Ⓕ
Q604	B-4 Ⓕ
Q605	A-8 Ⓒ
Q606	A-4 Ⓕ
Q607	B-4 Ⓕ
Q608	A-9 Ⓒ
Q609	A-8 Ⓒ
Q610	B-1 Ⓕ
Q611	B-1 Ⓕ
Q612	C-11 Ⓒ
Q613	C-5 Ⓕ
Q614	C-5 Ⓕ
Q615	B-2 Ⓕ
Q616	B-1 Ⓕ
Q617	B-2 Ⓕ
Q618	B-2 Ⓕ
Q619	B-2 Ⓕ
Q620	C-4 Ⓕ
Q621	A-3 Ⓕ

Integrated Circuit	
IC601	A-9 Ⓒ
IC602	C-11 Ⓒ
IC603	C-6 Ⓒ
IC604	C-7 Ⓒ
IC605	C-3 Ⓕ
IC606	C-3 Ⓕ
IC607	B-10 Ⓒ

Test Point	
TP601	A-9 Ⓒ
TP601	A-3 Ⓕ
TP602	B-9 Ⓒ
TP602	B-3 Ⓕ
TP603	C-9 Ⓒ
TP603	C-3 Ⓕ
TP604	C-6 Ⓒ
TP604	C-6 Ⓕ
TP605	C-11 Ⓒ
TP605	A-1 Ⓕ
TP606	B-9 Ⓒ
TP606	B-3 Ⓕ
TP607	B-10 Ⓒ
TP607	A-2 Ⓕ
TP608	B-10 Ⓒ
TP608	A-2 Ⓕ
TP609	C-11 Ⓒ
TP609	C-1 Ⓕ
TP610	C-11 Ⓒ
TP610	A-1 Ⓕ
TP611	B-10 Ⓒ
TP611	A-2 Ⓕ

Adjustment	
VR601	C-7 Ⓒ
VR602	C-7 Ⓒ
VR603	C-4 Ⓕ
C621	C-1 Ⓕ
C656	B-4 Ⓕ

Connector	
B601	C-1 Ⓕ
B601	C-11 Ⓒ
BA602	A-8 Ⓒ
BA602	A-4 Ⓕ
BA603	C-6 Ⓕ
BA603	C-6 Ⓒ
BA604	C-7 Ⓒ
BA604	C-5 Ⓕ
P601	A-8 Ⓒ
P601	A-4 Ⓕ

ADDRESS INFORMATION
Ⓒ ··· COMPONENT SIDE
Ⓕ ··· FOIL SIDE

3-10. SENSOR & CDS SCHEMATIC DIAGRAM

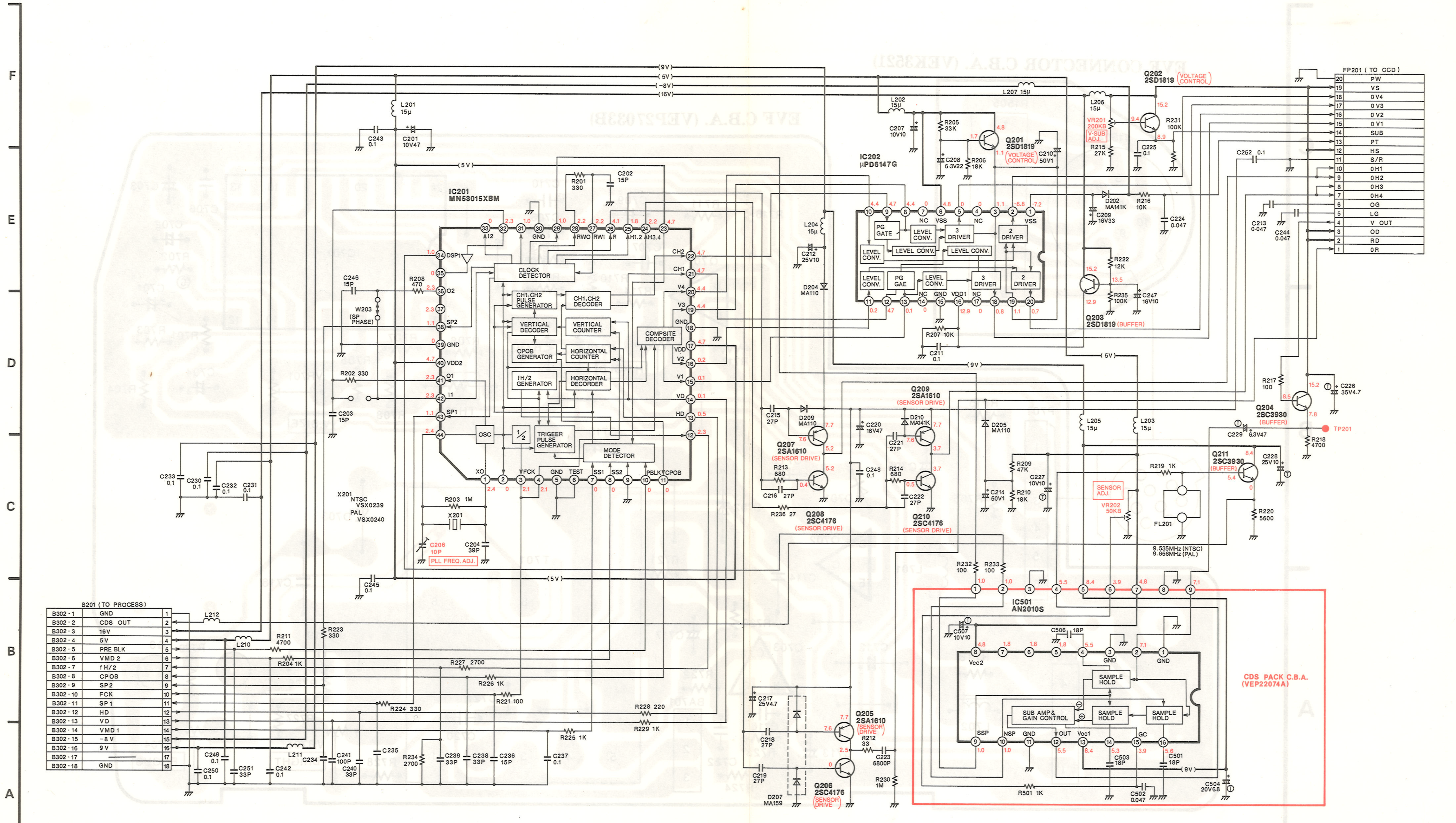

NOTE: DO NOT USE THE PART NUMBER SHOWN ON THIS DRAWING FOR ORDERING. THE CORRECT PART NUMBER IS SHOWN IN THE PARTS LIST, AND MAY BE SLIGHTLY DIFFERENT OR AMENDED SINCE THIS DRAWING WAS PREPARED.

NOTE: THE MEASUREMENT MODE OF THE DC VOLTAGE ON THIS DIAGRAM IS STOP MODE WITH AIM THE CAMERA AT THE LOGARITHMIC GRAY SCALE CHART.

NOTE: THE WAVEFORM OF THIS DIAGRAM MEASURED WITH AIM THE CAMERA AT THE LOGARITHMIC GRAY SCALE CHART.

3-11. SENSOR C.B.A. (VEP22073C) & CDS PACK C.B.A. (VEP22074A)

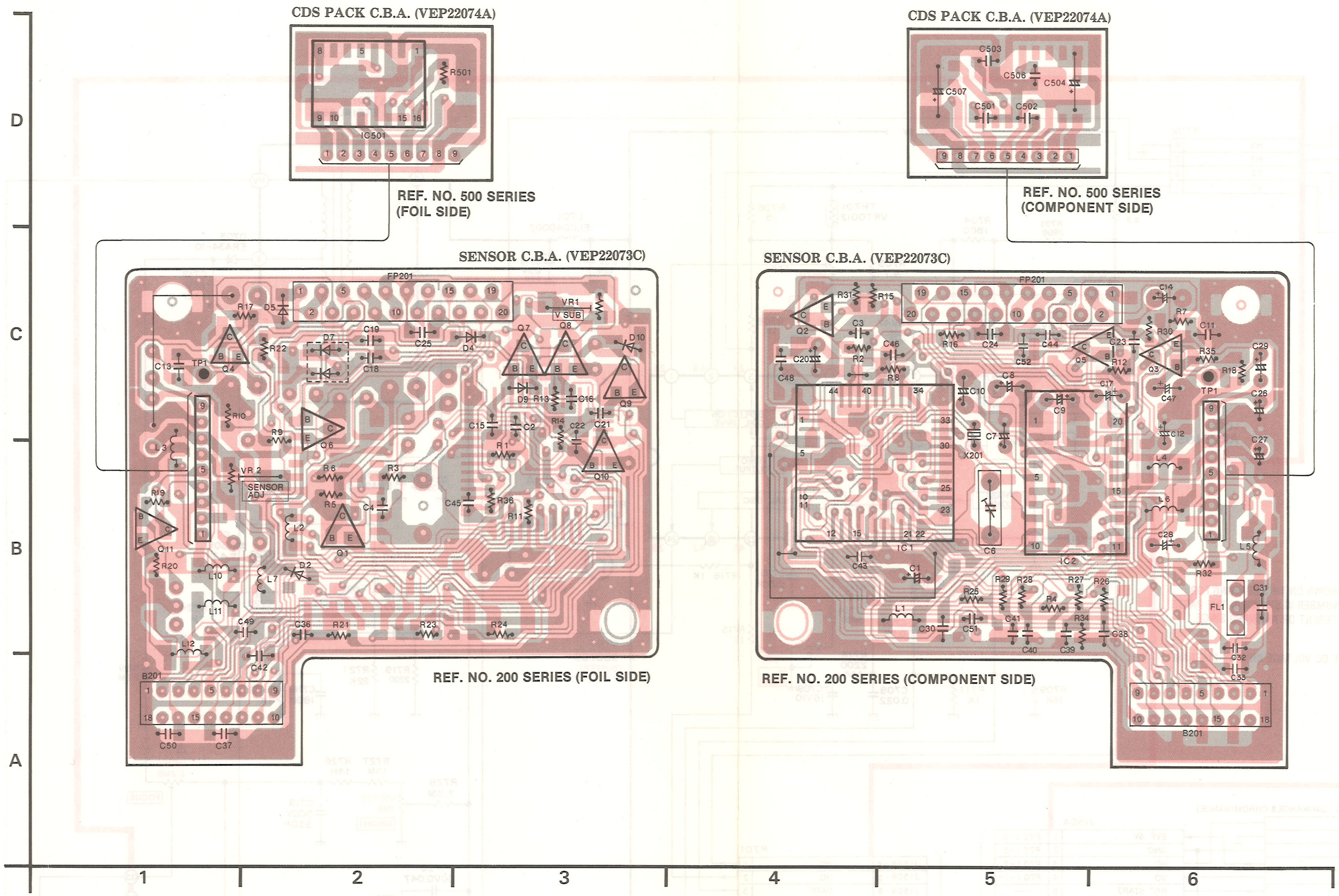

SENSOR C.B.A. & CDS C.B.A.		
Transistor		
Q201	B-2	Ⓕ
Q202	C-4	Ⓒ
Q203	C-6	Ⓒ
Q204	C-1	Ⓕ
Q205	C-6	Ⓒ
Q206	C-2	Ⓕ
Q207	C-3	Ⓕ
Q208	C-3	Ⓕ
Q209	C-3	Ⓕ
Q210	B-3	Ⓕ
Q211	B-1	Ⓕ
Integrated Circuit		
IC201	B-5	Ⓒ
IC202	B-5	Ⓒ
IC501	D-2	Ⓕ
Test Point		
TP201	C-6	Ⓒ
TP201	C-1	Ⓕ
Adjustment		
VR201	C-3	Ⓕ
VR202	B-2	Ⓕ
C206	B-5	Ⓒ
Connector		
B201	A-6	Ⓒ
B201	A-1	Ⓕ
FP201	C-5	Ⓒ
FP201	C-2	Ⓕ

ADDRESS INFORMATION
Ⓒ … COMPONENT SIDE
Ⓕ … FOIL SIDE

SENSOR CIRCUIT TP (Test Point) WAVE FORM (REF No. 200 Series)

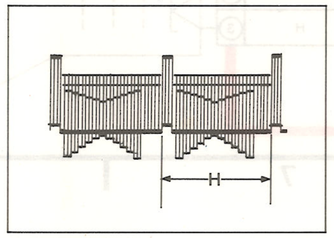

TP201 STOP
20mV/20μsec. div. 0.6Vp-p

3-12. E.V.F. SCHEMATIC DIAGRAM

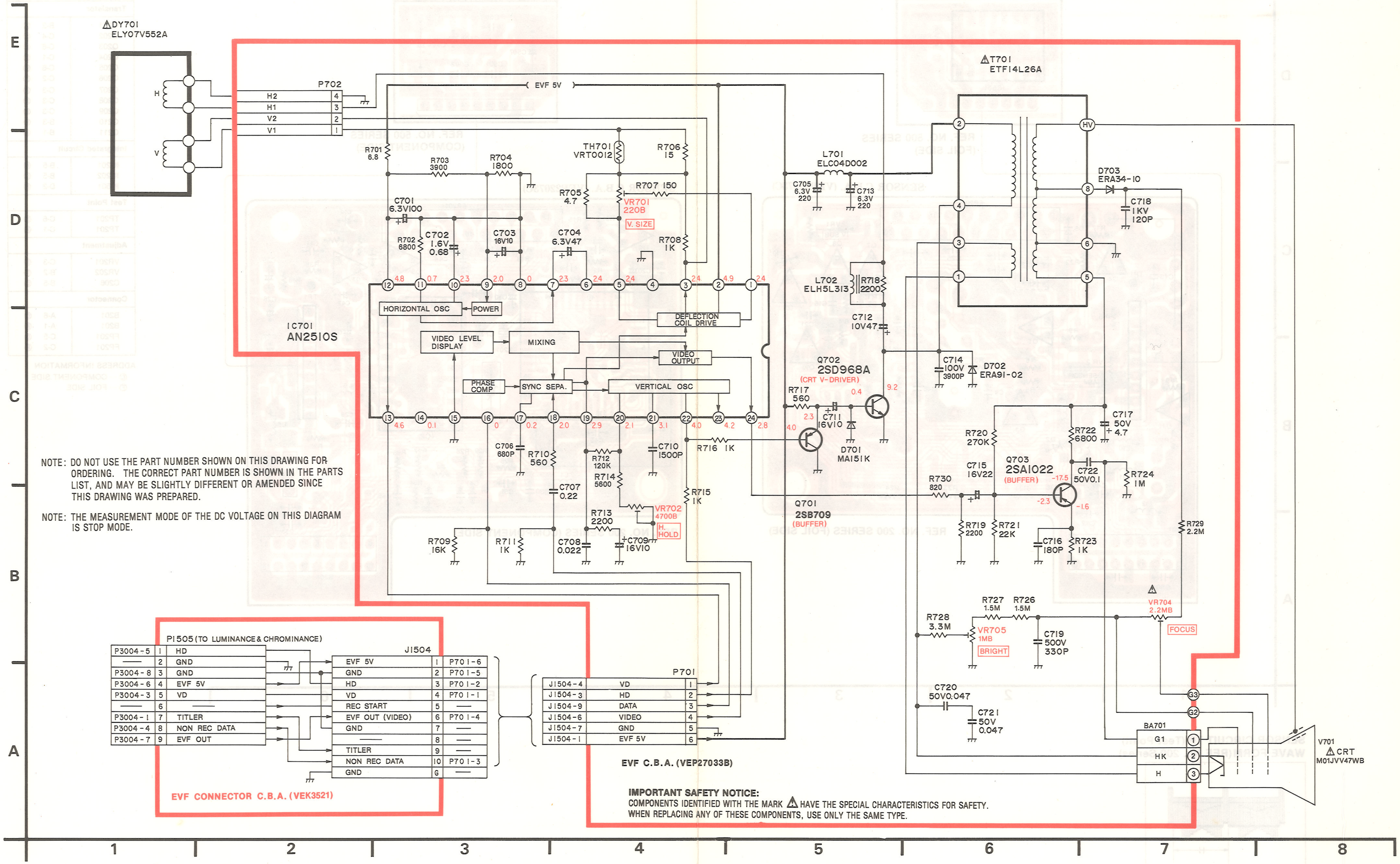

NOTE: DO NOT USE THE PART NUMBER SHOWN ON THIS DRAWING FOR ORDERING. THE CORRECT PART NUMBER IS SHOWN IN THE PARTS LIST, AND MAY BE SLIGHTLY DIFFERENT OR AMENDED SINCE THIS DRAWING WAS PREPARED.

NOTE: THE MEASUREMENT MODE OF THE DC VOLTAGE ON THIS DIAGRAM IS STOP MODE.

IMPORTANT SAFETY NOTICE:
COMPONENTS IDENTIFIED WITH THE MARK ⚠ HAVE THE SPECIAL CHARACTERISTICS FOR SAFETY.
WHEN REPLACING ANY OF THESE COMPONENTS, USE ONLY THE SAME TYPE.

Back Page:
SENSOR Section

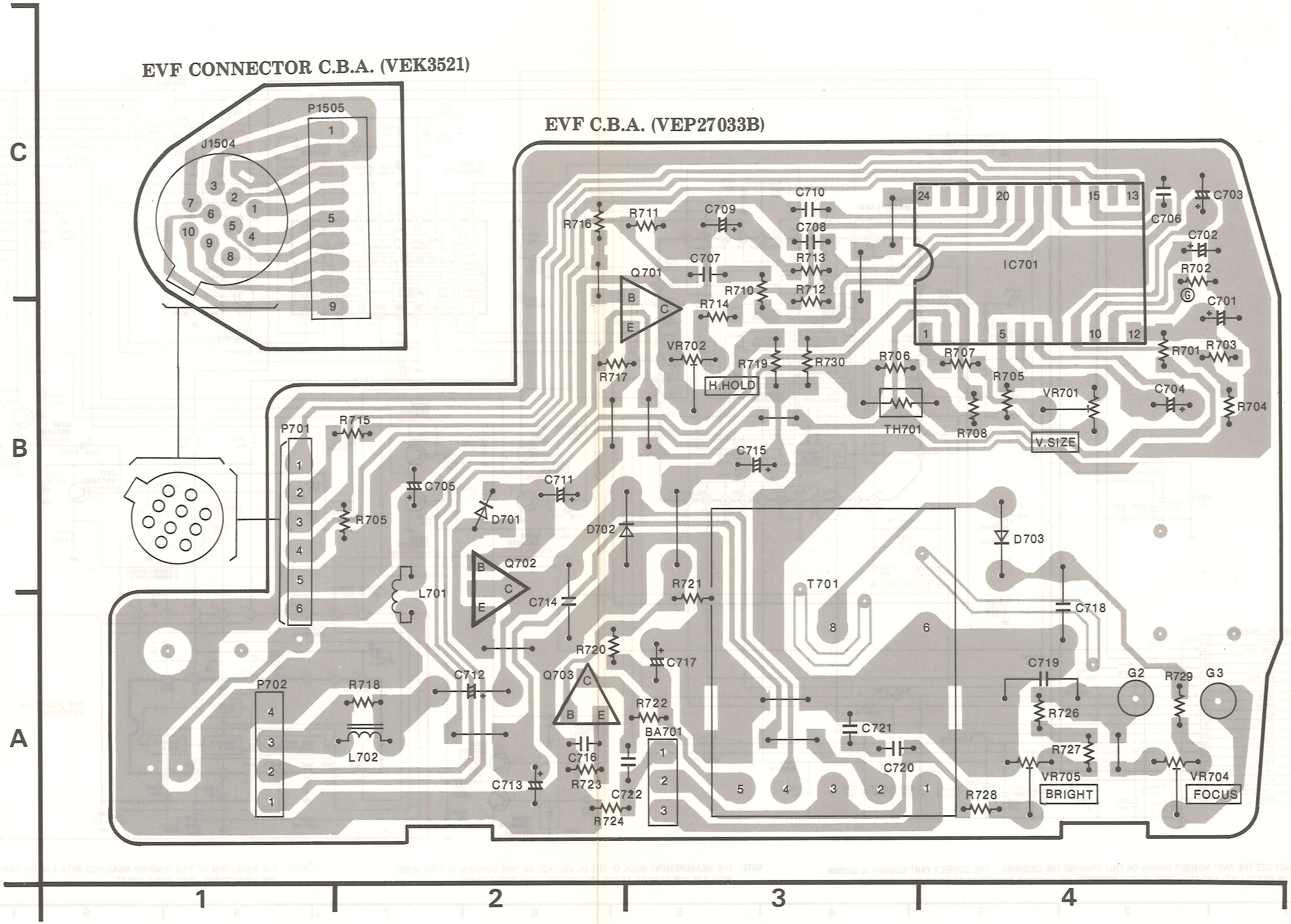
EVF CONNECTOR C.B.A. (VEK3521)
EVF C.B.A. (VEP27033B)
P1505
J1504
P701
P702
IC701
Q701
Q702
Q703
T701
BA701
H.HOLD
V.SIZE
BRIGHT
FOCUS
VR701
VR702
VR704
VR705
TH701
D701
D702
D703
L701
L702
G2
G3
C
B
A
1
2
3
4

3-14. POWER SUPPLY SCHEMATIC DIAGRAM

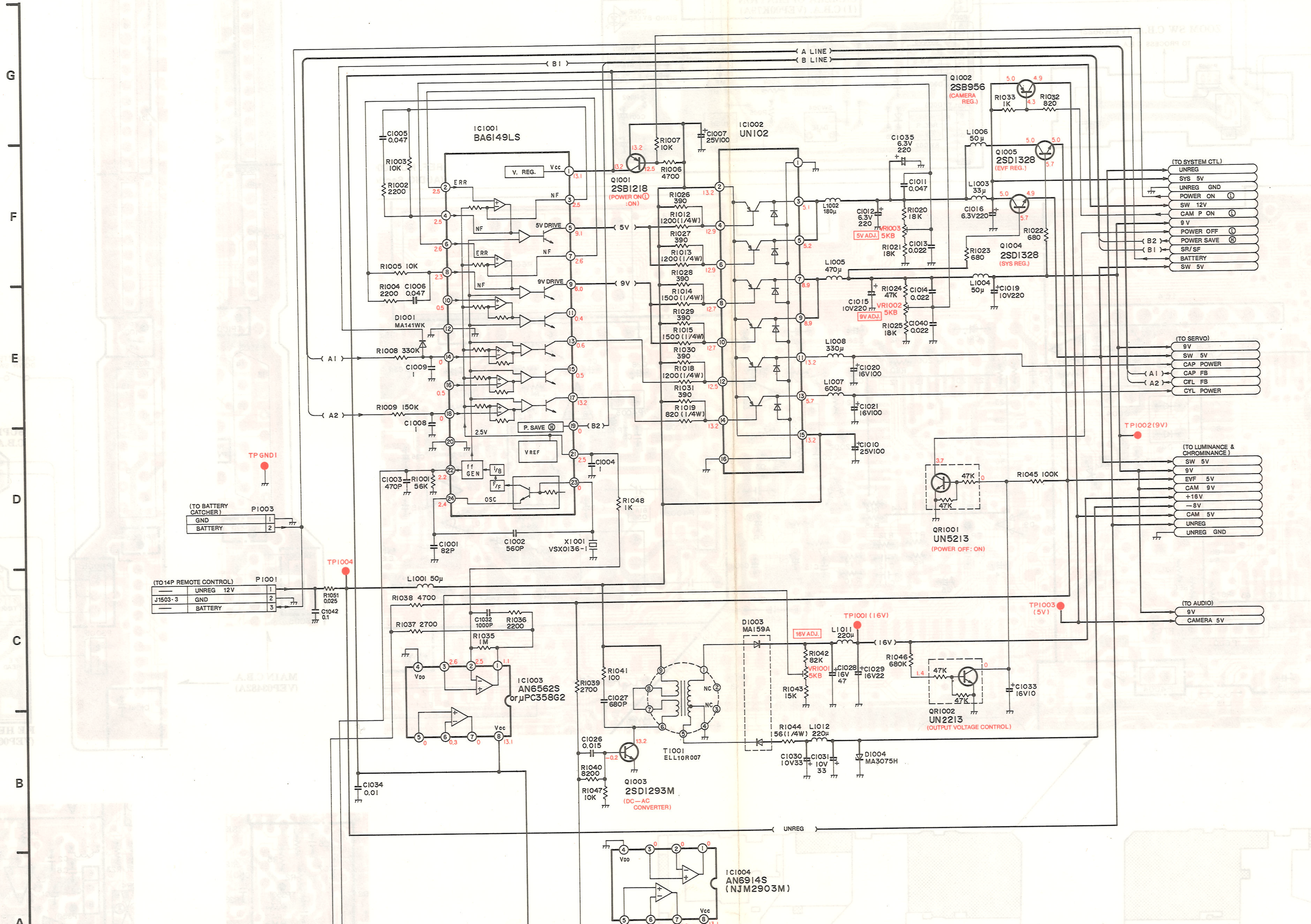

NOTE: THE MEASUREMENT MODE OF THE DC VOLTAGE ON THIS DIAGRAM IS STOP MODE.

NOTE: DO NOT USE THE PART NUMBER SHOWN ON THIS DRAWING FOR ORDERING. THE CORRECT PART NUMBER IS SHOWN IN THE PARTS LIST, AND MAY BE SLIGHTLY DIFFERENT OR AMENDED SINCE THIS DRAWING WAS PREPARED.

3-15. POWER SUPPLY Section In Main C.B.A. (VEP03482A)

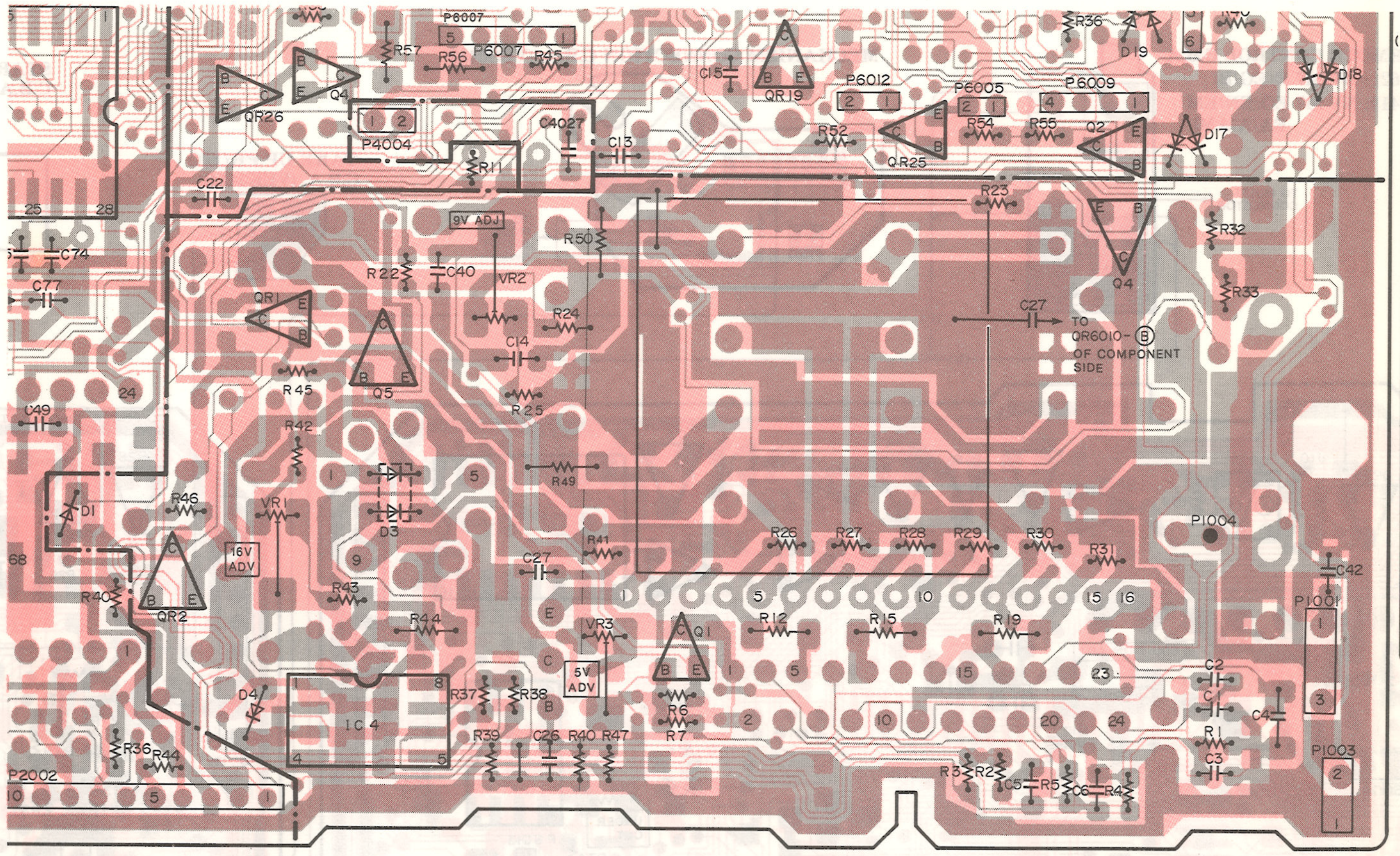

(FOIL SIDE)

REF. NO. 1000 SERIES
(POWER SUPPLY Section)

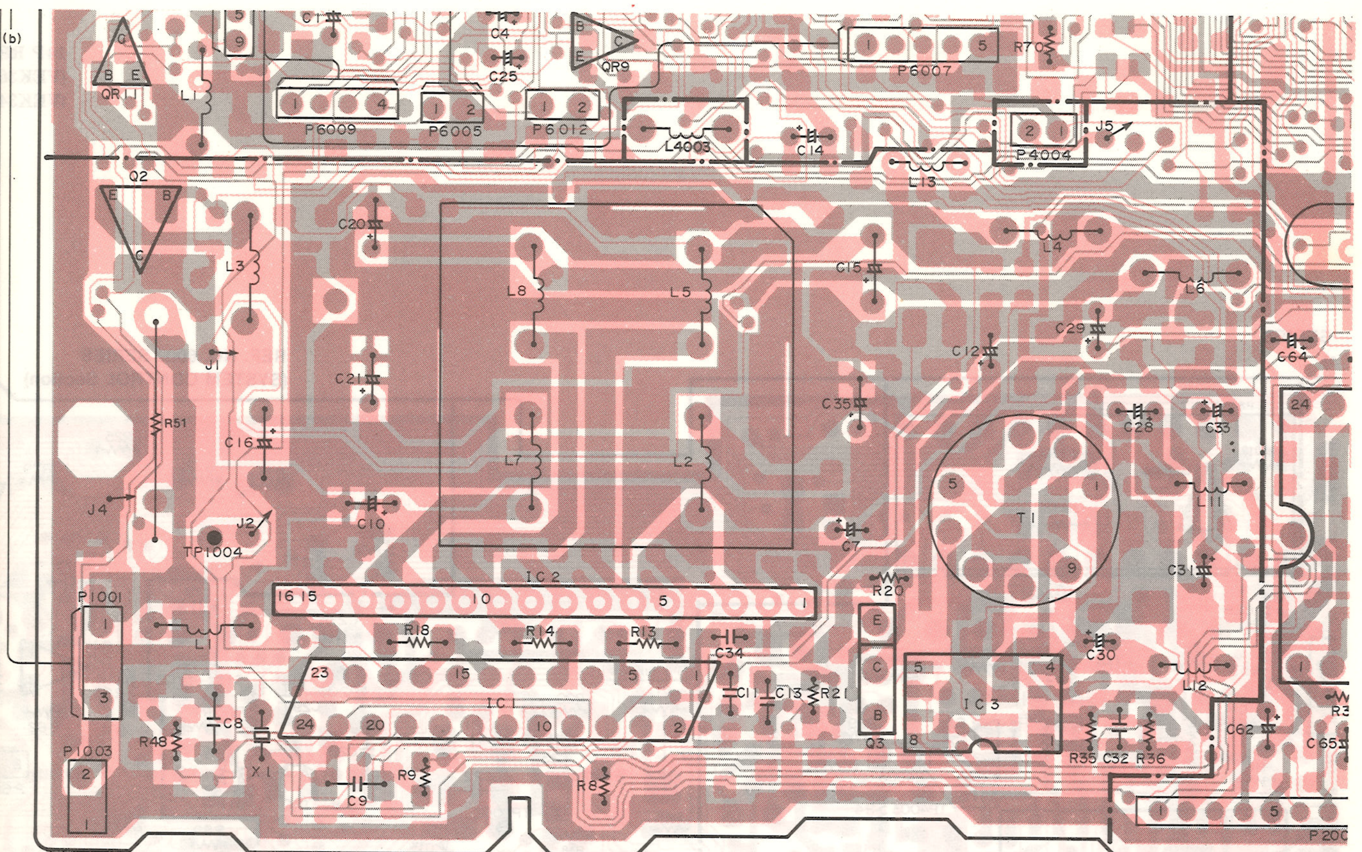

REF. NO. 1000 SERIES
(POWER SUPPLY Section)

(COMPONENT SIDE)

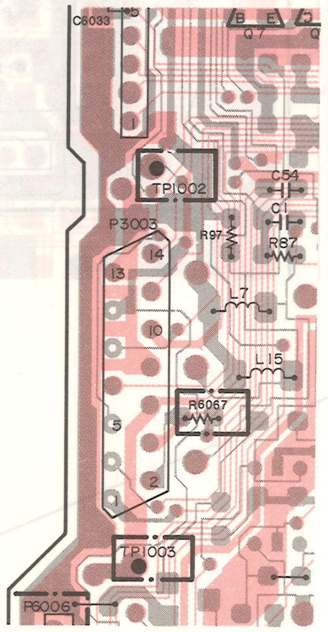

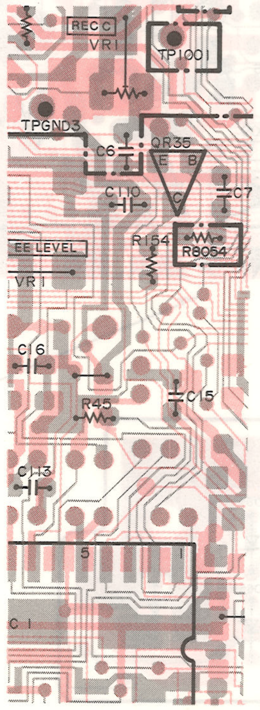

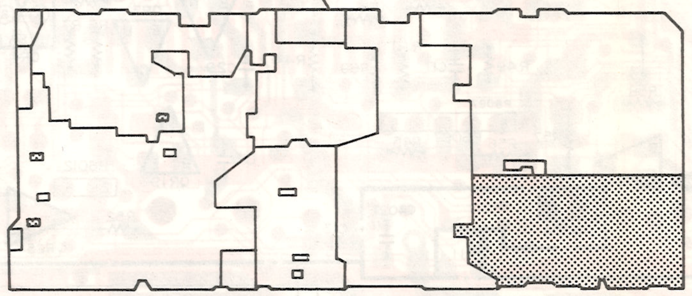

(FOIL SIDE)

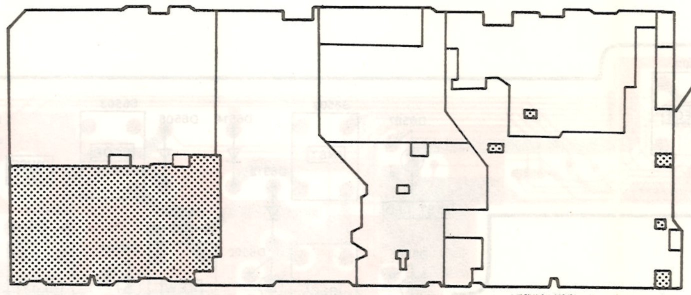

(COMPONENT SIDE)

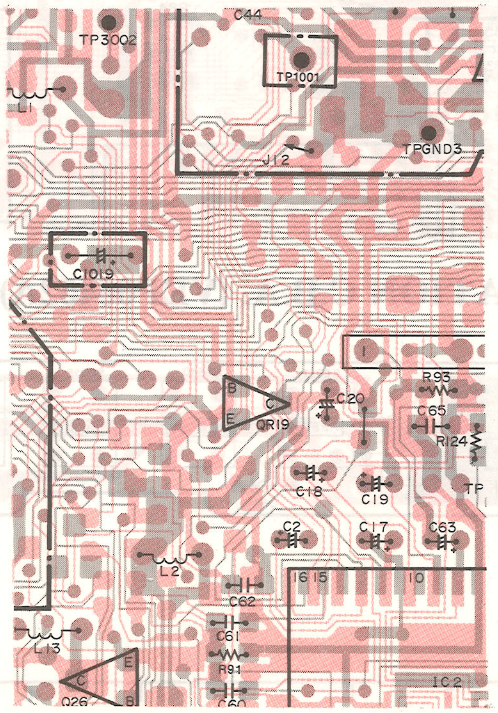

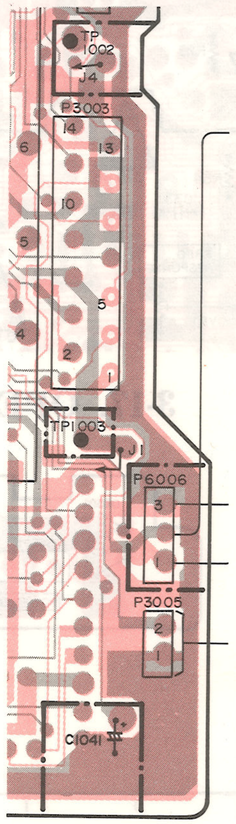

3-16. SYSTEM CONTROL Section In Main C.B.A. (VEP03482A), CAMERA OPERATION (I) C.B.A. (VEP00K79A) & CAMERA OPERATION (II) C.B.A. (VEK3522)

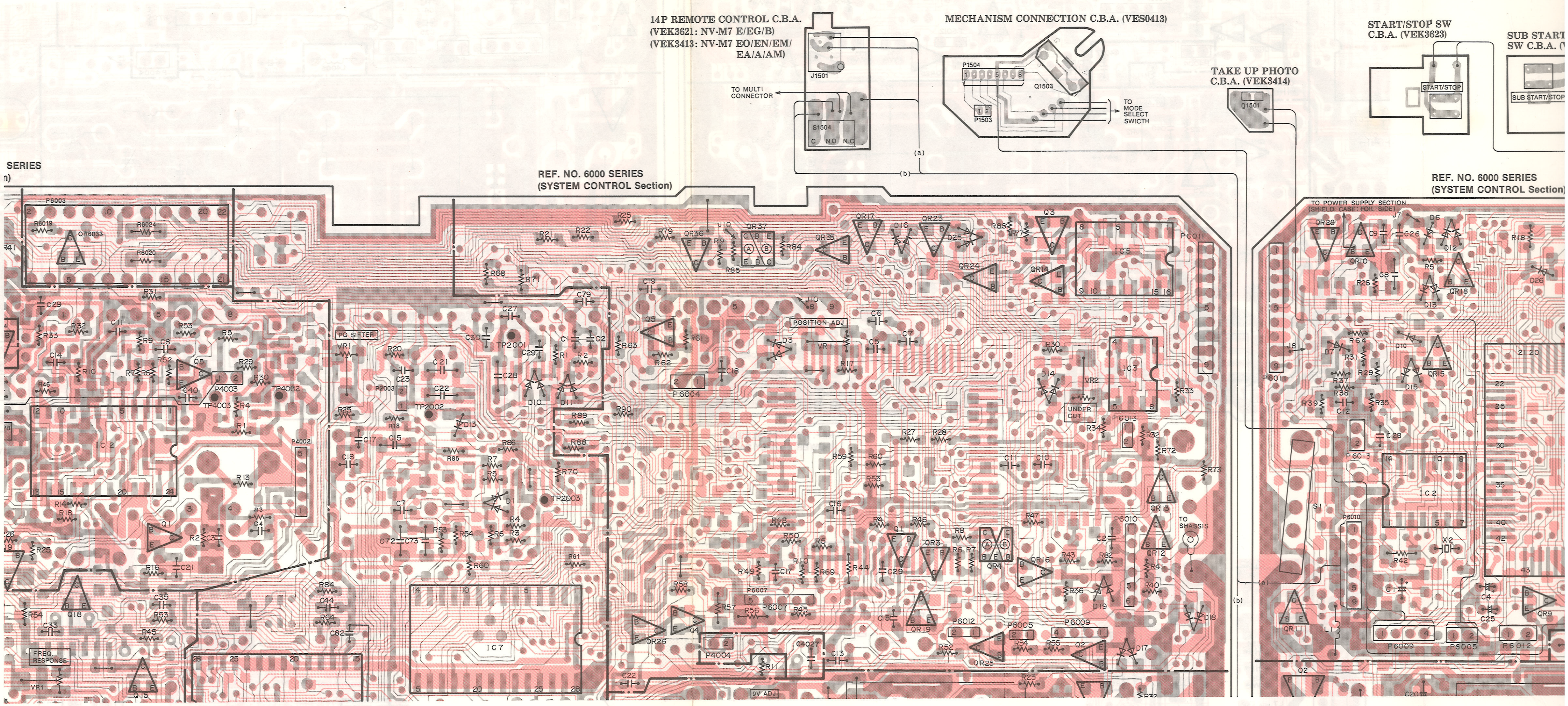

3-17. OPERATION C.B.A. (VEP06452A)

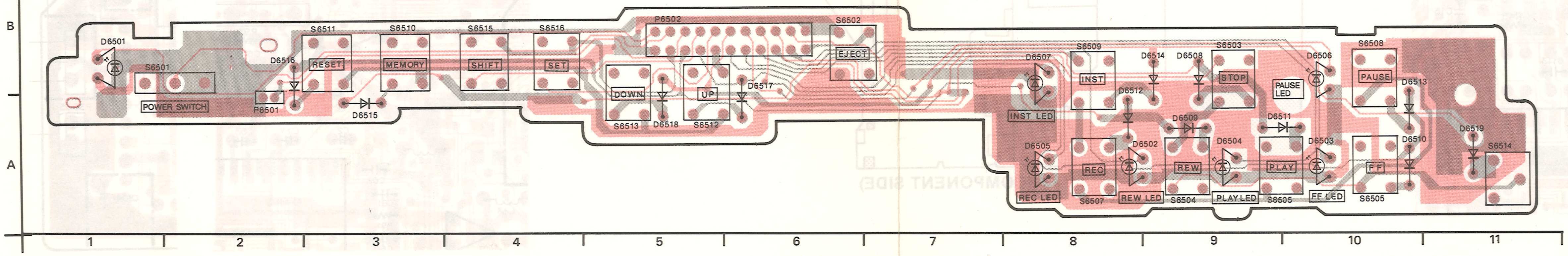

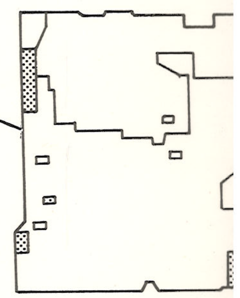

Back Page:
POWER SUPPLY Section

.A. (VEK3522)

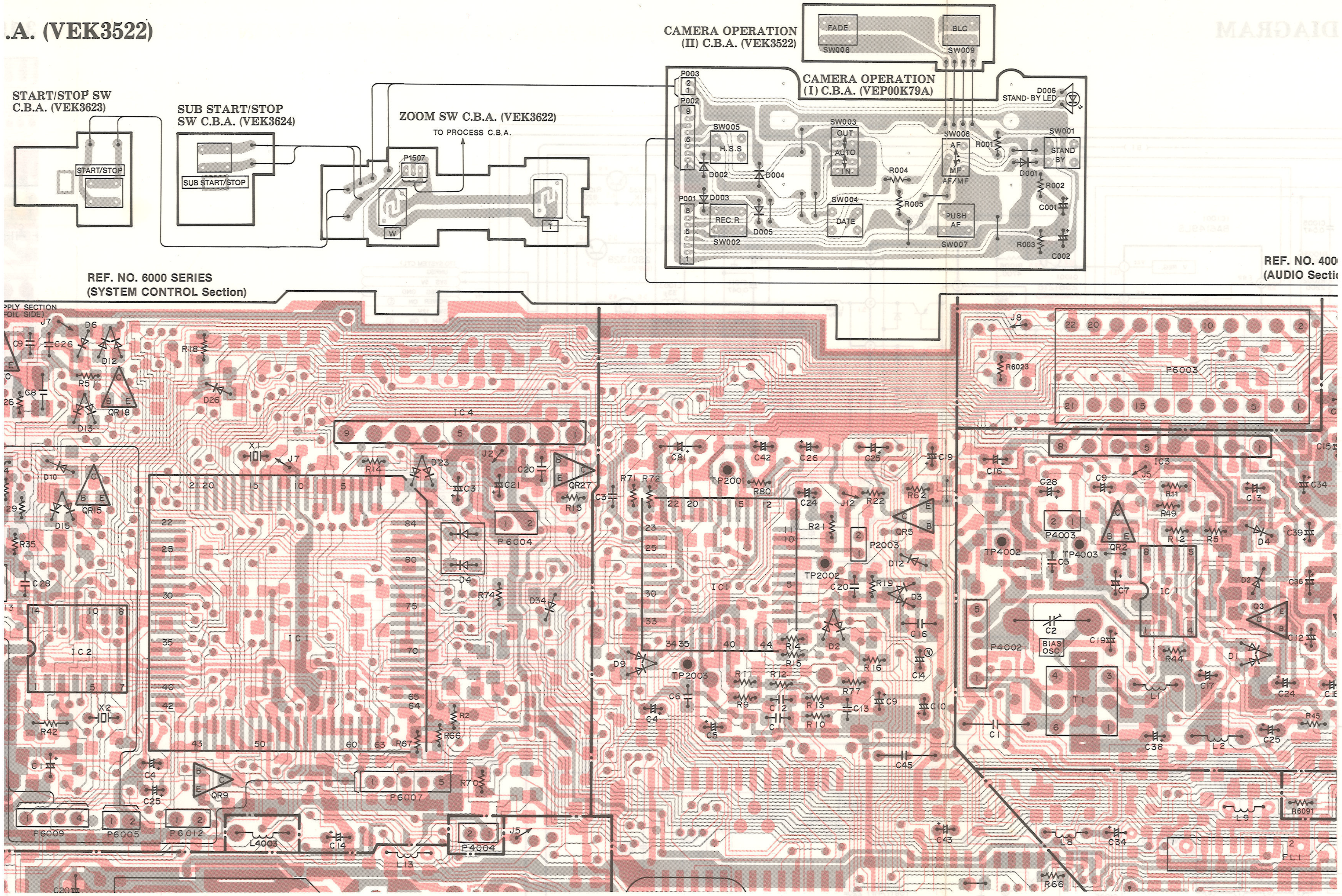

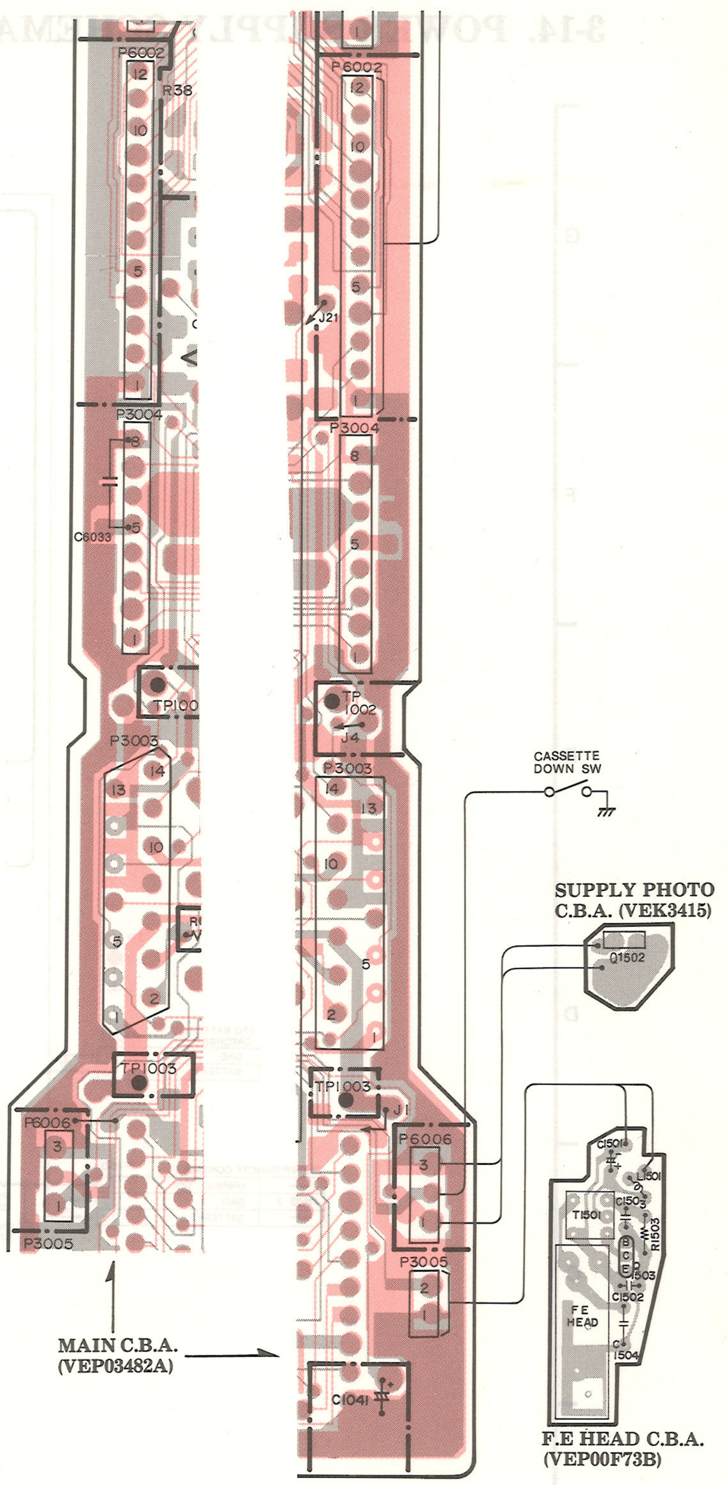

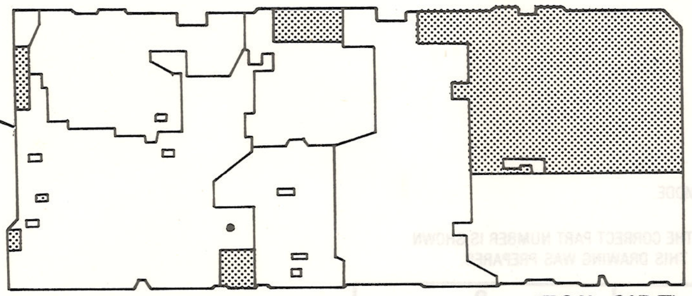

(FOIL SIDE)

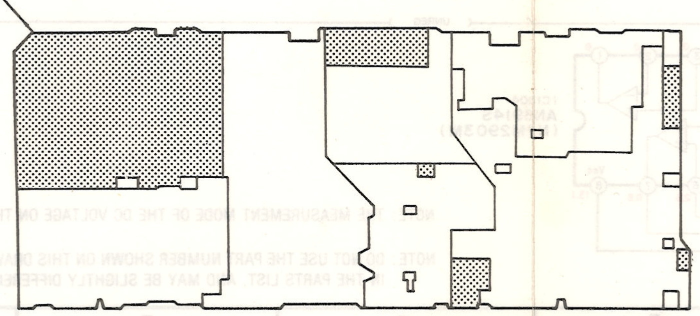

(COMPONENT SIDE)

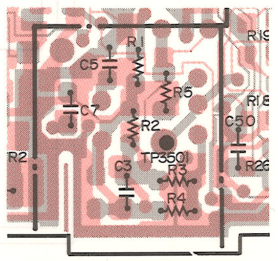

REF. NO. 3500 SERIES (ROTARY ERASE Section)

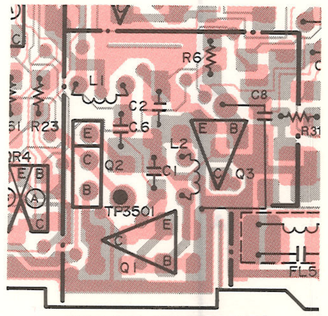

REF. NO. 3500 SERIES (ROTARY ERASE Section)

SYSTEM CONTROL ICs VOLTAGE CHART

REF. NO.	IC6001																			
MODE	1	2	3	4	5	6	7	8	9	10	11	12	13	14	15	16	17	18	19	20
STOP	0	0	0.2	0	0	4.8	4.9	4.9	4.9	0	0.3	4.9	4.8	2.5	2.0	4.8	3.7	3.8	3.8	3.8
PLAY	0	0	0.2	0	0	4.7	4.9	4.9	4.9	0	0.4	0.5	4.8	2.5	2.0	4.9	3.8	0.3	3.8	3.8
REC	0	0	0.2	0	0	4.8	4.9	4.9	4.9	0	0.3	4.9	4.8	2.5	2.0	4.8	0.4	0.3	3.8	3.8
F.F	0	0	0.2	0	0	4.8	4.9	4.9	4.9	0	0.3	4.9	4.8	2.5	2.0	4.8	3.7	3.8	0.3	3.8
REW	0	0	0.3	0	0	4.8	4.9	4.9	4.9	0	0.3	—	4.8	2.5	2.0	4.8	3.7	3.8	3.8	0.3
REF. NO.	IC6001																			
MODE	21	22	23	24	25	26	27	28	29	30	31	32	33	34	35	36	37	38	39	40
STOP	0.3	0	0	3.7	3.8	3.8	3.9	4.0	4.9	4.7	4.9	4.9	0	0	0	0.1	4.9	0	4.9	4.7
PLAY	0.3	0	0	3.8	3.8	3.8	3.9	4.6	4.9	4.7	4.9	4.9	0	0	0.1	0.1	0	0	0	4.8
REC	0.4	0	0	3.7	0	3.8	3.9	—	4.9	4.7	4.9	4.9	0	0.1	0.1	0.1	4.9	0.1	4.9	4.9
F.F	0.3	0	0	3.7	3.8	3.7	0	0	4.9	4.7	4.8	4.9	0	0	0.1	0.1	4.9	0	4.9	4.7
REW	0.3	0	0	3.7	3.8	3.8	0	4.0	4.9	4.7	0	0	0.1	0.1	0.1	0.1	4.9	0	4.9	4.7
REF. NO.	IC6001																			
MODE	41	42	43	44	45	46	47	48	49	50	51	52	53	54	55	56	57	58	59	60
STOP	0	0	2.2	4.7	0	0.4	4.8	4.8	4.8	4.8	4.8	4.8	4.9	4.8	4.8	4.9	4.9	4.9	4.9	0.1
PLAY	0	0	0	4.7	—	—	4.9	4.9	4.9	4.9	4.9	4.8	0	0	4.8	0.3	0.1	0.2	0.1	0.1
REC	−0.3	−0.1	2.2	4.7	—	—	4.9	4.9	4.9	4.9	4.9	4.8	4.9	4.8	4.7	4.8	4.9	4.9	0.1	0.1
F.F	0	0	2.2	4.7	0	—	4.9	4.9	4.9	4.9	4.9	4.8	4.9	4.8	4.8	4.8	4.9	4.9	4.9	0.1
REW	0	0	2.2	4.7	0	—	4.9	4.9	4.9	4.9	4.9	4.8	4.9	4.8	4.8	4.8	4.9	4.9	4.9	0.1
REF. NO.	IC6001																			
MODE	61	62	63	64	65	66	67	68	69	70	71	72	73	74	75	76	77	78	79	80
STOP	0.1	4.9	2.4	0	0	4.9	4.9	0.3	0	0.3	0.3	0.3	0	0	−0.1	0	0.1	0.1	0.1	0
PLAY	0.1	4.9	2.4	−0.2	0	4.9	4.9	—	3.7	8.8	8.8	5.7	8.7	2.4	0	4.9	0	4.9	2.5	2.5
REC	0.1	0.1	2.4	0	0	4.9	4.9	—	3.6	0.3	0.3	0.1	8.7	2.4	0	4.9	4.9	4.9	2.5	4.9
F.F	0.1	4.9	2.4	0	0	4.9	4.9	—	3.6	8.8	8.8	5.7	6.8	2.4	0	0	0	2.5	2.5	4.9
REW	0.1	4.9	2.4	0	0	4.9	4.9	—	3.6	8.8	8.8	5.7	6.8	2.4	0	0	0	2.5	4.9	4.9
REF. NO.	IC6001																			
MODE	81	82	83	84																
STOP	0.1	0.1	0	0																
PLAY	4.9	0	0	0																
REC	4.9	0	0.3	0.4																
F.F	4.9	4.9	0	0																
REW	4.9	4.9	0	0																
REF. NO.	IC6002																			
MODE	1	2	3	4	5	6	7	8	9	10	11	12	13	14						
STOP	0	0.4	0	0	−0.1	0.2	0	0	0	4.7	0	4.9	0	0						
PLAY	0	0.5	0	0	−0.1	0.2	0	0	0	4.7	0	4.9	0	0						
REC	0	0.4	0	0	−0.1	0.2	0	0	0	4.7	0	4.9	0	0.4						
F.F	0	0.4	0	0	−0.1	0.2	0	−0.1	−0.1	4.8	0	4.9	0	0						
REW	0	0.4	0	0	−0.1	0.2	0	0	0	4.7	0	4.9	0	0.3						
REF. NO.	IC6003										IC6004									
MODE	1	2	3	4	5	6	7	8			1	2	3	4	5	6	7	8	9	
STOP	4.7	4.2	4.4	0	0.7	0	4.7	13.0			6.9	13.2	0.4	0	0	0	0.3	13.2	6.9	
PLAY	4.7	4.2	4.5	0	0.7	0	4.7	13.3			6.8	13.4	0.5	0	0	0	0.5	13.4	6.8	
REC	4.7	4.2	4.4	0	0.7	0	4.7	12.9			6.9	13.0	0.5	0	0	0	0.3	13.0	6.9	
F.F	4.7	4.1	4.4	0	0.7	0	4.7	12.9			6.8	13.0	0.4	0	0	0	0.3	13.0	6.8	
REW	4.7	4.2	4.4	0	0.7	0	4.7	12.8			6.9	13.0	0.4	0	0	0	0.4	13.0	6.8	
REF. NO.	IC6005																			
MODE	1	2	3	4	5	6	7	8	9	10	11	12	13	14	15	16				
STOP	4.7	0.1	0.1	0	0	5.0	5.0	0	0.1	0.1	0	0	4.6	5.0	4.9	5.0				
PLAY	4.7	0.1	0.1	0	0	5.0	5.0	0	0.1	0.1	1.8	4.9	4.9	0	4.9	5.0				
REC	4.9	0.1	0.1	0	0	5.0	0	0	5.0	5.0	5.0	0	0	5.0	4.9	5.0				
F.F	4.7	0.1	0.1	0	0	5.0	5.0	0	0.1	0.1	1.8	1.8	4.6	5.0	4.9	5.0				
REW	4.7	0.1	0.1	0	0	5.0	5.0	0	0.1	0.1	0	1.8	4.6	4.9	4.9	5.0				

SYSTEM CONTROL TRANSISTORs VOLTAGE CHART

REF. NO.	Q6001			Q6002			Q6003			Q6004			Q6005		
MODE	E	C	B	E	C	B	E	C	B	E	C	B	E	C	B
STOP	13.1	8.7	13.1	5.0	4.9	4.3	8.8	8.8	8.0	−0.4	13.1	−0.2	6.9	8.8	7.3
PLAY	13.4	8.9	13.4	5.0	5.0	4.3	8.8	8.8	8.0	−0.5	−0.1	−0.3	6.8	8.8	7.3
REC	13.0	8.6	13.0	5.0	4.9	4.3	8.7	8.7	8.0	−0.4	13.0	−0.2	6.9	8.8	7.3
F.F	13.1	8.7	13.1	5.0	4.9	4.3	8.8	8.8	8.1	2.0	13.1	2.2	6.8	8.8	7.3
REW	13.0	8.6	13.0	5.0	4.9	4.3	8.8	8.8	8.1	2.0	13.0	2.2	6.8	8.8	7.3

REF. NO.	QR6003			QR6004 Ⓐ			QR6004 Ⓑ			QR6009			QR6010			QR6011		
MODE	E	C	B	E	C	B	E	C	B	E	C	B	E	C	B	E	C	B
STOP	0	0	8.7	0	10.8	0	0	0	4.9	0	0.1	4.9	0	4.9	0	12.5	12.5	0
PLAY	0	0	8.9	0	11.0	0	0	0	4.9	0	5.0	0.1	0	4.9	0	12.5	12.4	0
REC	0	0	8.6	0	10.7	0	0	0	4.9	0	0.1	4.9	0	4.9	0	12.5	12.4	0
F.F	0	0	8.7	0	10.8	0	0	0	4.9	0	0.1	4.9	0	4.9	0	12.5	12.4	0
REW	0	0	8.7	0	10.8	0	0	0	4.9	0	0.1	4.9	0	4.9	0	12.5	12.4	0

REF. NO.	QR6012			QR6013			QR6014			QR6015			QR6016			QR6017		
MODE	E	C	B	E	C	B	E	C	B	E	C	B	E	C	B	E	C	B
STOP	0	0	6.1	4.8	4.8	0	4.6	4.8	4.8	4.6	4.8	4.9	5.0	0	4.9	4.6	4.8	4.4
PLAY	0	0	6.2	4.8	4.8	0	4.8	4.8	4.2	4.6	4.8	5.0	5.0	0	4.9	4.6	4.8	4.4
REC	0	0	6.0	4.7	4.7	0	4.6	4.7	4.8	4.6	4.8	4.9	5.0	4.9	0.1	4.6	4.8	4.4
F.F	0	0	6.1	4.7	4.7	0	4.6	4.8	4.8	4.6	4.8	4.9	5.0	−0.2	4.9	4.6	4.8	4.4
REW	0	0	6.1	4.7	4.7	0	4.5	4.7	4.8	4.6	4.8	4.9	5.0	−0.1	4.9	4.6	4.8	4.4

REF. NO.	QR6018			QR6019			QR6023			QR6024			QR6025			QR6026		
MODE	E	C	B	E	C	B	E	C	B	E	C	B	E	C	B	E	C	B
STOP	4.8	4.8	0.5	0	0	4.4	4.8	4.8	0.5	0	0	0.4	0	0	4.8	8.8	−0.2	8.7
PLAY	4.8	4.8	0.5	0	0	3.8	4.8	4.8	0.5	0	0	0.4	0	0	4.9	8.8	−0.4	8.7
REC	4.8	4.8	0.5	0	0	4.4	4.8	4.8	0.5	0	5.0	0.4	0	0	4.9	8.8	−0.1	8.7
F.F	4.8	4.8	0.5	0	0	4.4	4.8	4.8	0.5	0	0	0.4	0	0	4.9	8.8	2.5	7.2
REW	4.8	4.8	0.5	0	0	4.4	4.8	4.8	0.5	0	0	0.4	0	0	4.9	8.8	2.2	7.2

REF. NO.	QR6027			QR6028			QR6033			QR6035			QR6036		
MODE	E	C	B	E	C	B	E	C	B	E	C	B	E	C	B
STOP	0	8.7	0	0	0	0	0	0	4.0	12.7	0	12.6	0	4.4	0
PLAY	0	8.7	0.1	0	—	0	0	0.7	0.7	12.9	0	12.8	0	4.4	0
REC	0.8	0.9	4.9	0	—	0	0	0	0.8	12.7	0	12.5	0	4.4	0
F.F	0	8.7	0	0	0	0	0	0	4.0	12.8	0	12.7	0	4.4	0
REW	0	8.7	0	0	0	0	0	0	4.0	12.8	0	12.6	0	4.4	0

REF. NO.	QR6037 Ⓐ			QR6037 Ⓑ		
MODE	E	C	B	E	C	B
STOP	13.1	−0.2	—	12.6	−0.3	−0.4
PLAY	13.3	−0.6	—	−0.4	12.8	−0.4
REC	13.0	−0.3	—	−0.6	12.5	−0.4
F.F	13.2	−0.4	—	−0.4	12.7	−0.4
REW	13.1	−0.6	—	−0.6	12.7	−0.5

3-18. SYSTEM CONTROL, OPERATION & CAMERA OPERATION (I), (II) SCHEMATIC DIAGRAM

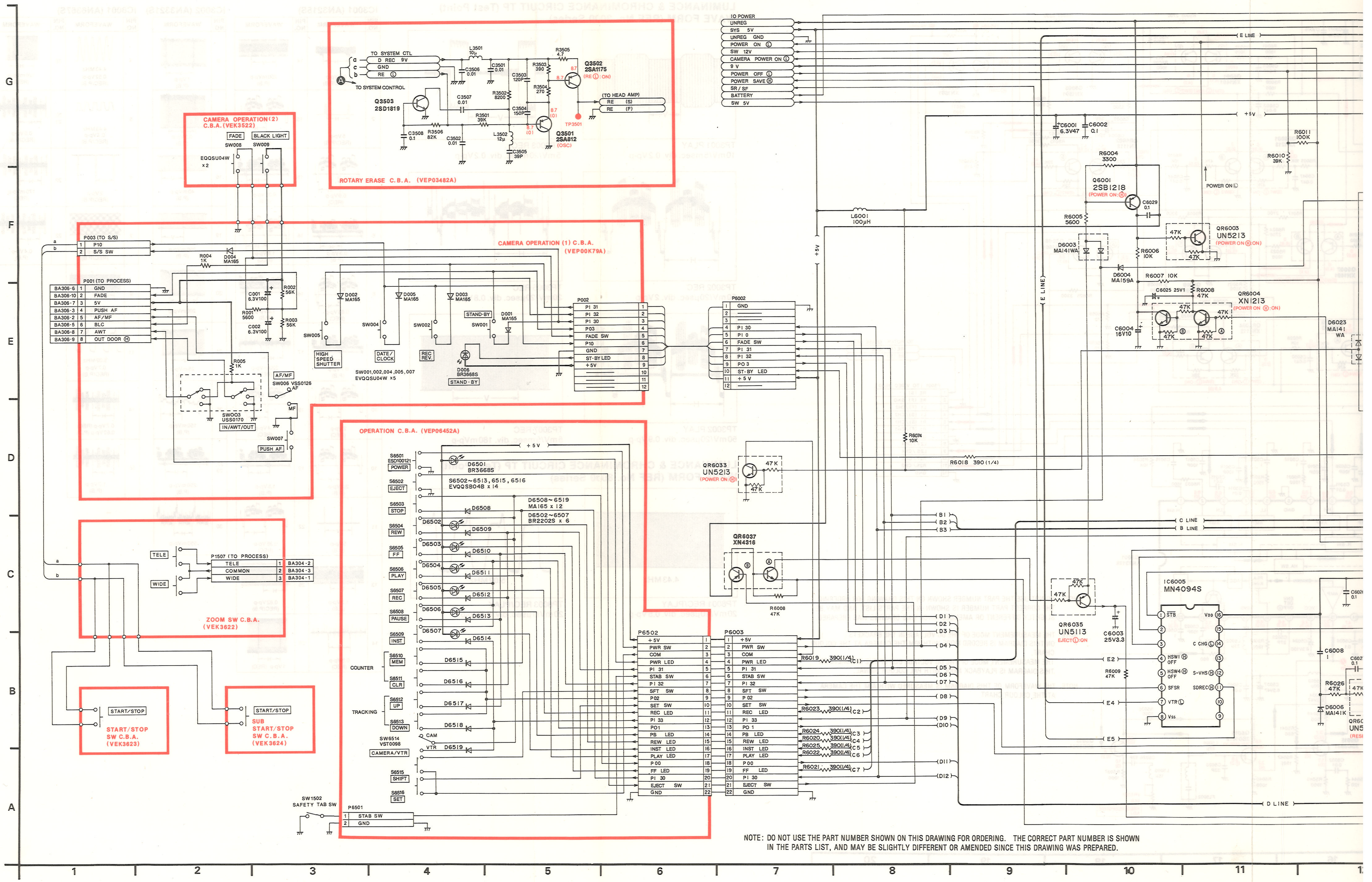

NOTE: DO NOT USE THE PART NUMBER SHOWN ON THIS DRAWING FOR ORDERING. THE CORRECT PART NUMBER IS SHOWN IN THE PARTS LIST, AND MAY BE SLIGHTLY DIFFERENT OR AMENDED SINCE THIS DRAWING WAS PREPARED.

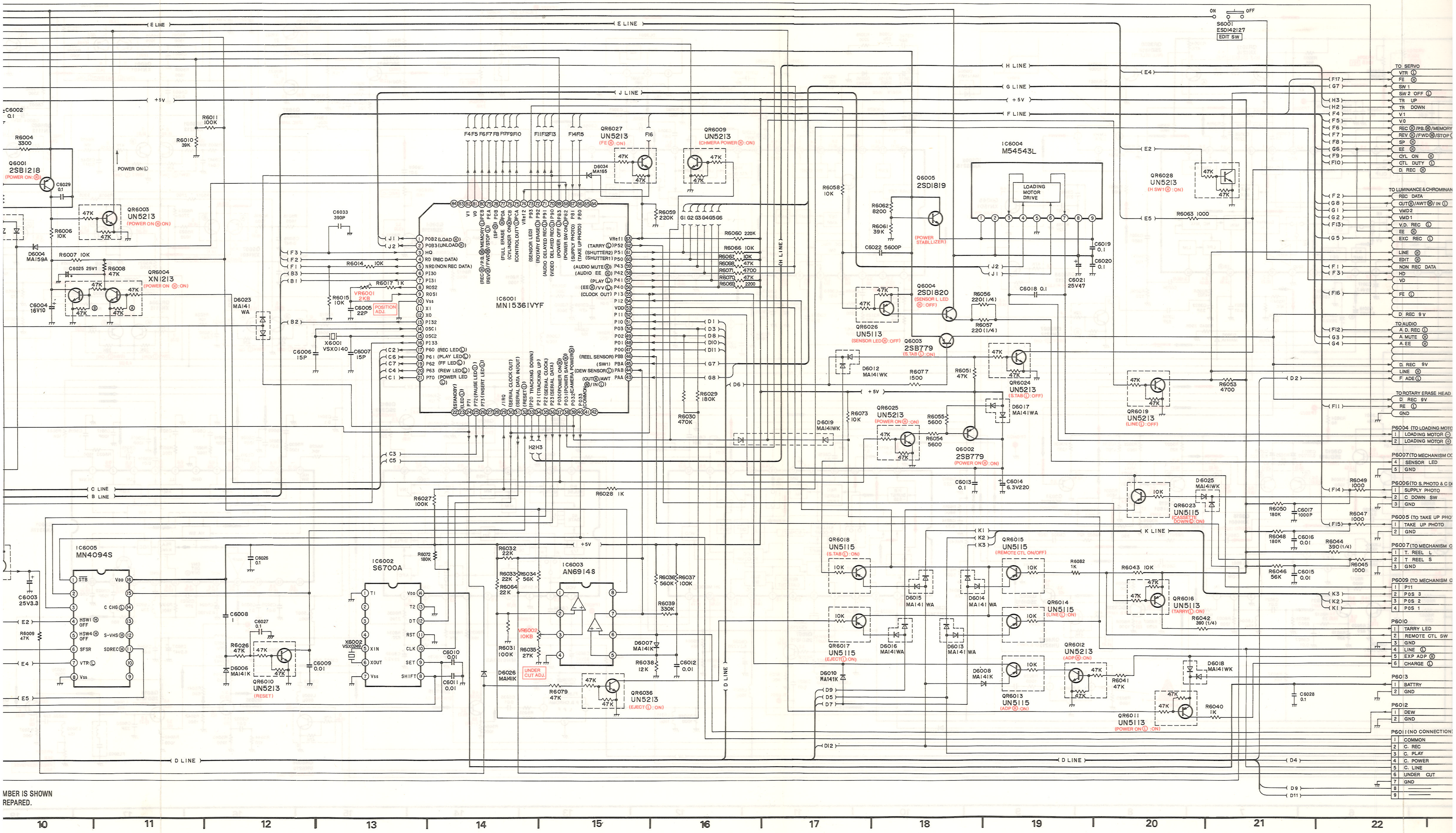

MBER IS SHOWN
REPARED.

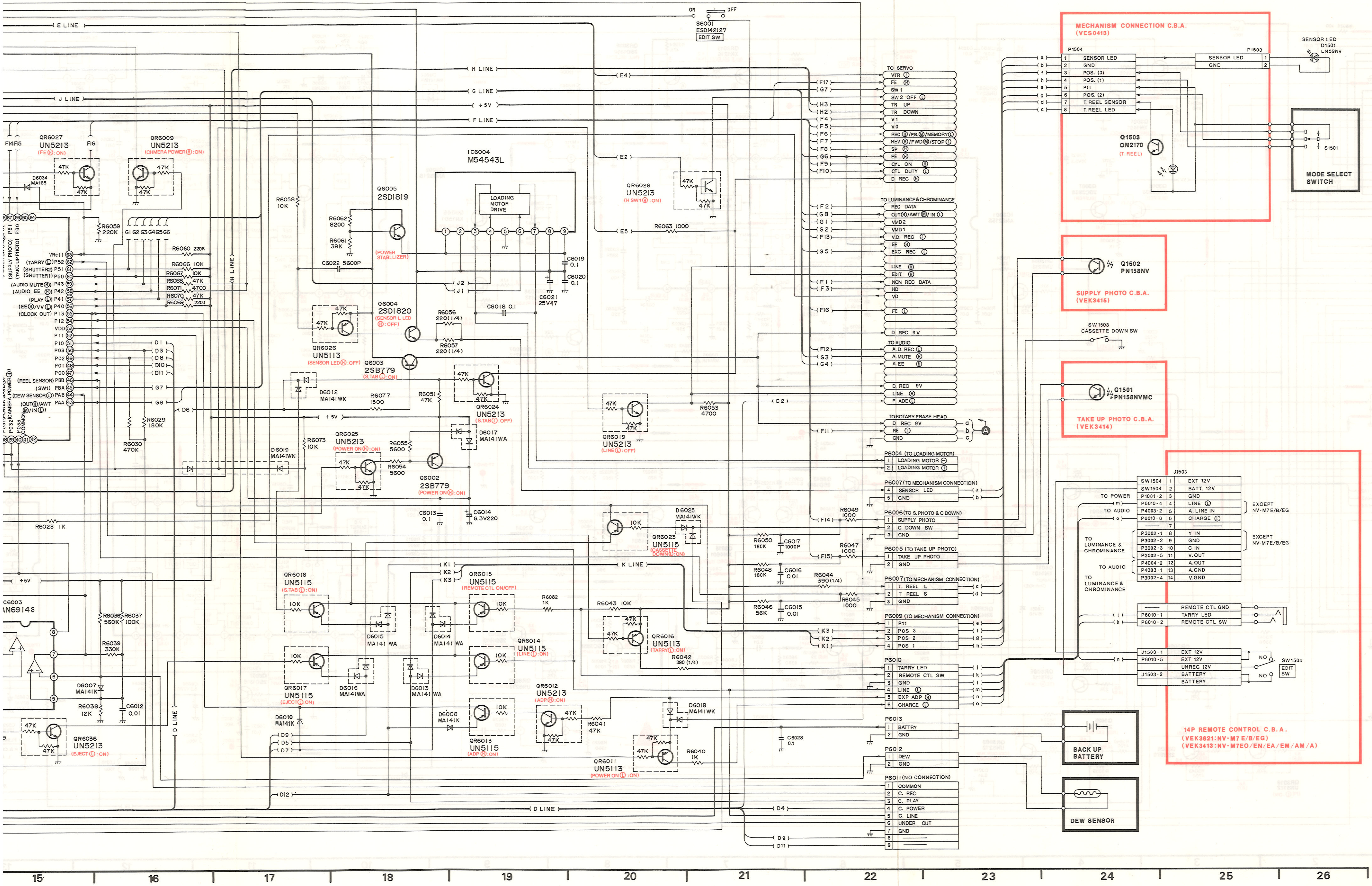

Next Page:
LUMINANCE & CHROMINANCE Section

3-19. LUMINANCE, CHROMINANCE & HEAD AMP SCHEMATIC DIAGRAM

MAIN SIGNAL PATH IN REC MODE

MAIN SIGNAL PATH IN PLAYBACK MODE

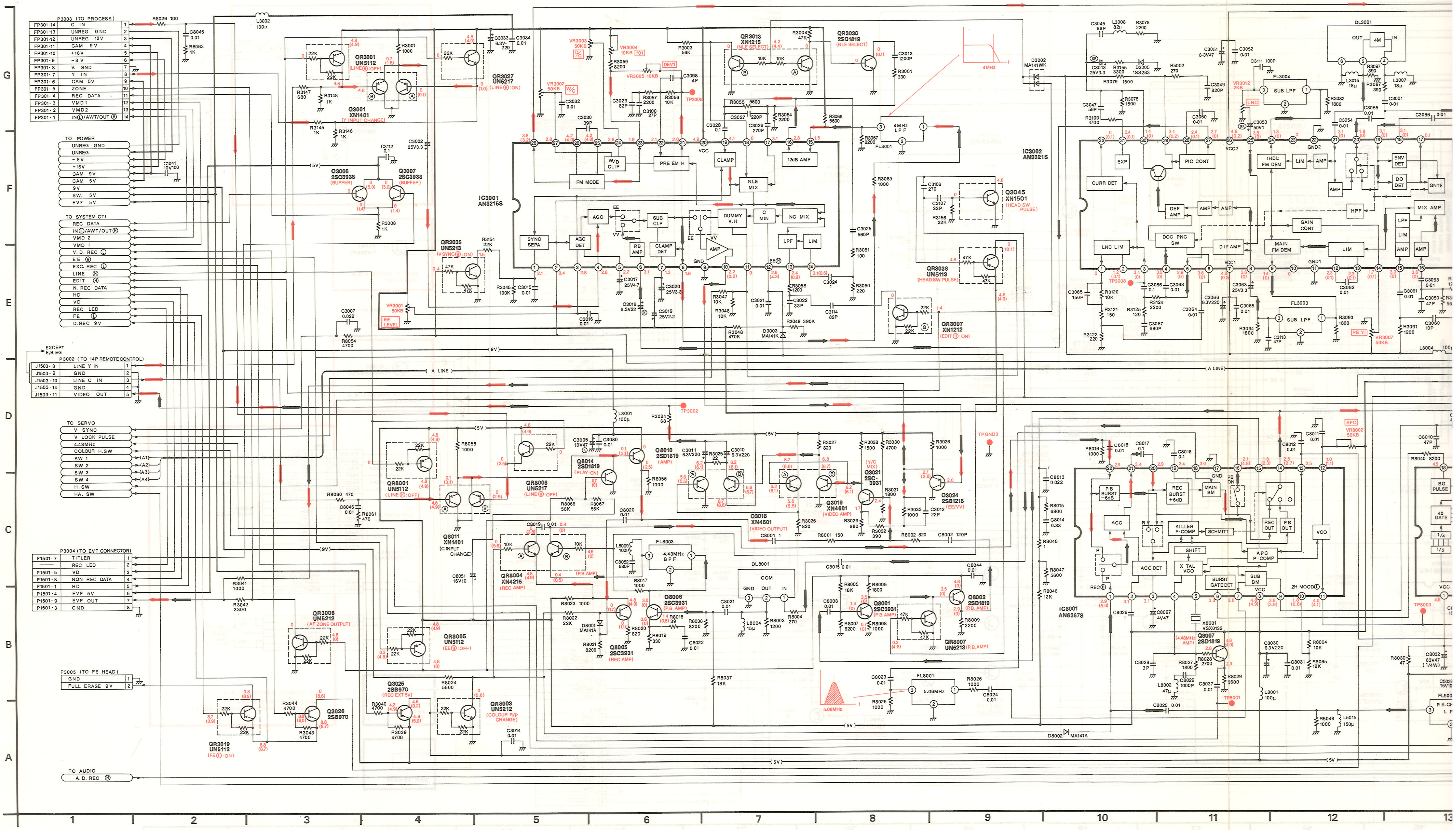

MAIN SIGNAL PATH IN PLAYBACK MODE

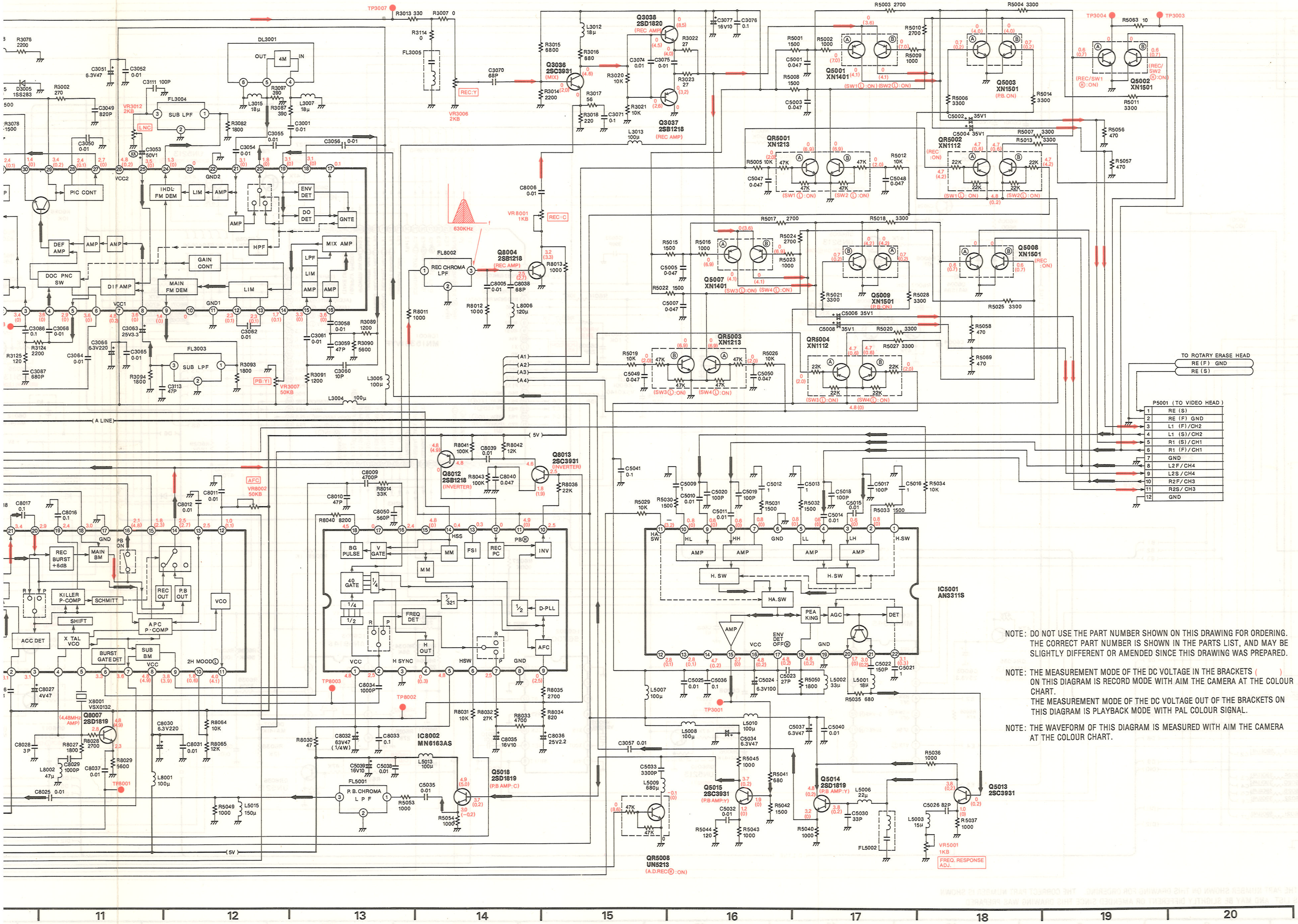

NOTE: DO NOT USE THE PART NUMBER SHOWN ON THIS DRAWING FOR ORDERING. THE CORRECT PART NUMBER IS SHOWN IN THE PARTS LIST, AND MAY BE SLIGHTLY DIFFERENT OR AMENDED SINCE THIS DRAWING WAS PREPARED.

NOTE: THE MEASUREMENT MODE OF THE DC VOLTAGE IN THE BRACKETS ( ) ON THIS DIAGRAM IS RECORD MODE WITH AIM THE CAMERA AT THE COLOUR CHART.
THE MEASUREMENT MODE OF THE DC VOLTAGE OUT OF THE BRACKETS ON THIS DIAGRAM IS PLAYBACK MODE WITH PAL COLOUR SIGNAL.

NOTE: THE WAVEFORM OF THIS DIAGRAM IS MEASURED WITH AIM THE CAMERA AT THE COLOUR CHART.

LUMINANCE & CHROMINANCE CIRCUIT TP (T
WAVE FORM (REF No. 3000 Series)

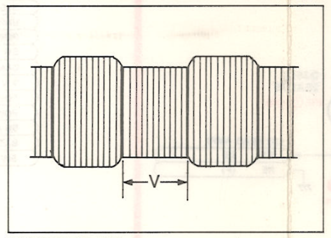
TP3001 PLAY
10mV/5msec. div. 0.2Vp-p

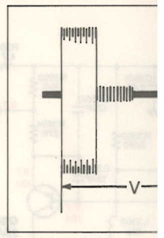
TP3003 REC
5mV/20msec. div

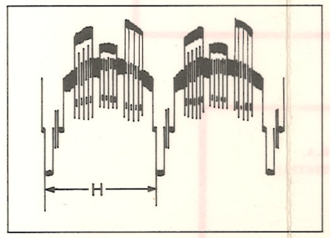
TP3002 REC
50mV/20μsec. div. 2Vp-p

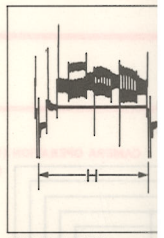
TP3005 REC
20mV/20μsec. div

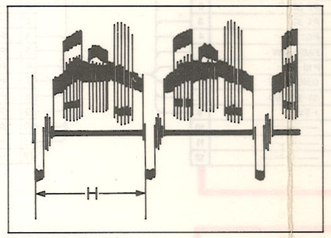
TP3002 PLAY
50mV/20μsec. div. 0.9Vp-p

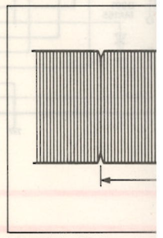
TP3007 REC
5mV/5msec. div.

LUMINANCE & CHROMINANCE CIRCUIT TP (T
WAVE FORM (REF No. 8000 Series)

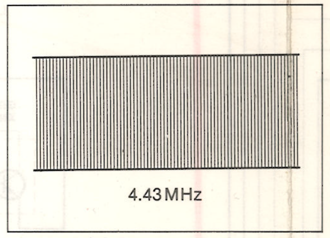

TP8001 REC/PLAY
20mV/10μsec. div. 0.5Vp-p

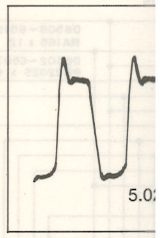
TP8003 REC/PLAY
20mV/1μsec. div.

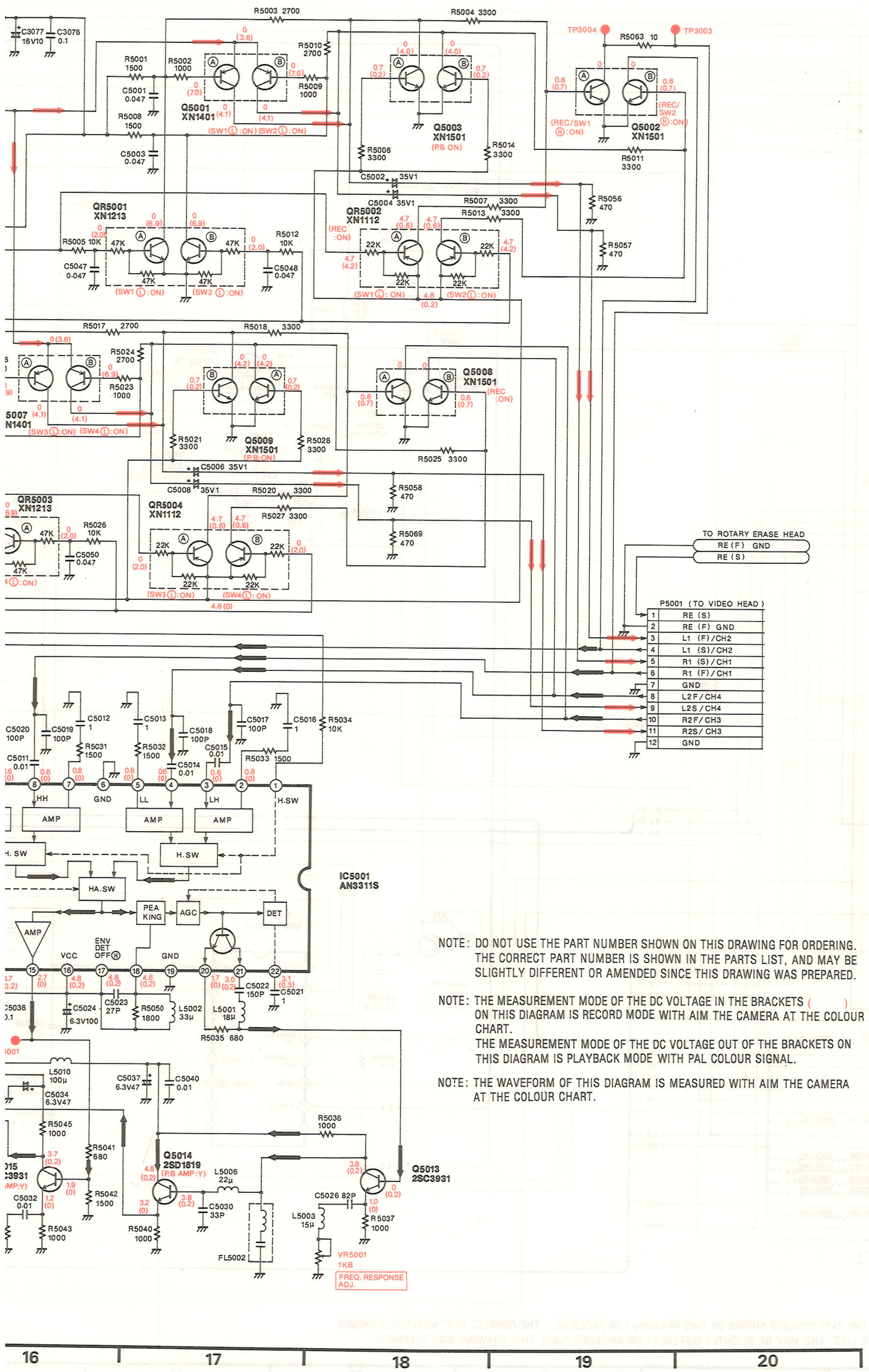

NOTE: DO NOT USE THE PART NUMBER SHOWN ON THIS DRAWING FOR ORDERING. THE CORRECT PART NUMBER IS SHOWN IN THE PARTS LIST, AND MAY BE SLIGHTLY DIFFERENT OR AMENDED SINCE THIS DRAWING WAS PREPARED.

NOTE: THE MEASUREMENT MODE OF THE DC VOLTAGE IN THE BRACKETS ( ) ON THIS DIAGRAM IS RECORD MODE WITH AIM THE CAMERA AT THE COLOUR CHART.
THE MEASUREMENT MODE OF THE DC VOLTAGE OUT OF THE BRACKETS ON THIS DIAGRAM IS PLAYBACK MODE WITH PAL COLOUR SIGNAL.

NOTE: THE WAVEFORM OF THIS DIAGRAM IS MEASURED WITH AIM THE CAMERA AT THE COLOUR CHART.

LUMINANCE & CHROMINANCE CIRCUIT TP (Test Point) WAVE FORM (REF No. 3000 Series)

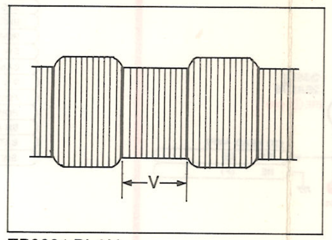

TP3001 PLAY
10mV/5msec. div. 0.2Vp-p

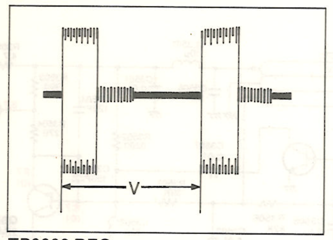

TP3003 REC
5mV/20msec. div. 0.2Vp-p

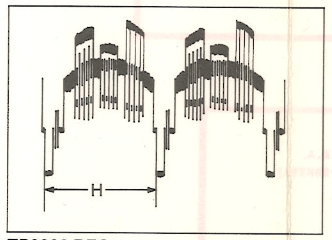

TP3002 REC
50mV/20μsec. div. 2Vp-p

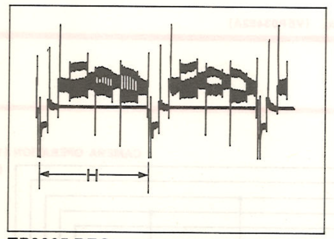

TP3005 REC
20mV/20μsec. div. 0.8Vp-p

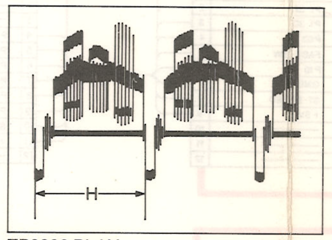

TP3002 PLAY
50mV/20μsec. div. 0.9Vp-p

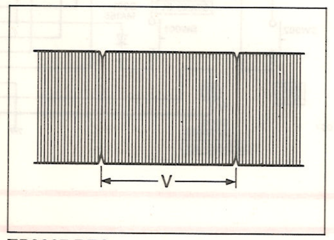

TP3007 REC
5mV/5msec. div. 180mVp-p

LUMINANCE & CHROMINANCE CIRCUIT TP (Test Point) WAVE FORM (REF No. 8000 Series)

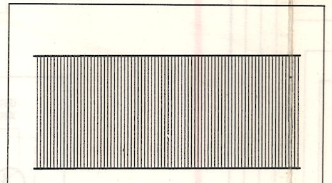

4.43MHz

TP8001 REC/PLAY
20mV/10μsec. div. 0.5Vp-p

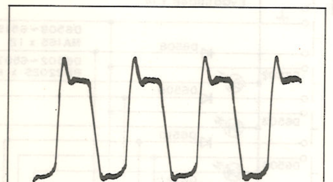

5.02MHz

TP8003 REC/PLAY
20mV/1μsec. div. 0.7Vp-p

IC3001 (AN3215S)

PIN NO.	WAVEFORM	PIN NO.	WAVEFORM
1	0.7Vp-p (REC/P.B)	14	250mVp-p (P.B)
2	5Vp-p (REC/P.B)	15	350mVp-p (REC)
4	0.9Vp-p (REC)	15	0.35Vp-p (P.B)
6	0.3Vp-p (P.B)	16	1.8Vp-p (REC)
8	0.65Vp-p (REC)	16	1.5Vp-p (P.B)
8	0.7Vp-p (P.B)	17	220mVp-p (REC)
10	2Vp-p (REC)	19	1.4Vp-p (REC)
10	2.2Vp-p (P.B)	19	1.5Vp-p (P.B)
11	5Vp-p (P.B)	22	0.35Vp-p (REC)
13	1.3Vp-p (P.B)	25	0.62Vp-p (REC/P.B)
14	0.5Vp-p (REC)	28	1Vp-p (REC)

IC3002 (AN3321S)

PIN NO.	WAVEFORM
9	1Vp-p (P.B)
12, 13	0.2Vp-p (P.B)
16	40mVp-p (P.B)
19	250mVp-p (P.B)
20	200mVp-p (P.B)
21	25mVp-p (P.B)
25	150mVp-p (P.B)
27, 29	250mVp-p (P.B)
30	550mVp-p (P.B)

IC8001 (AN6367S)

PIN NO.	WAVEFORM	PIN NO.	WAVEFORM
4	4.43MHz 0.52Vp-p (REC/P.B)	18	120mVp-p (REC)
5	4.43MHz 0.7Vp-p (REC/P.B)	20, 21	0.5Vp-p (REC/P.B)
6	2Vp-p (REC/P.B)	22	170mVp-p (REC)
7	1Vp-p (REC/P.B)	22	0.4Vp-p (P.B)
9	0.7Vp-p (REC/P.B)		
11	5.02MHz 0.7Vp-p (REC/P.B)		
14	0.7Vp-p (REC) 0.62Vp-p (P.B)		
16	1.2Vp-p (P.B)		

IC8002 (MN6163AS)

PIN NO.	WAVEFORM
2	0.4MHz
4	5Vp-p (REC)
6	5Vp-p (REC/P.B)
10	5Vp-p (P.B)
13	5Vp-p (REC/P.B)
14	5Vp-p (REC/P.B)
16	625kHz 4Vp-p (REC)
18	5Vp-p (REC/P.B)

3-20. LUMINANCE, CHROMINANCE & HEAD AMP Section In Main C.B.A. (VEP03482A)

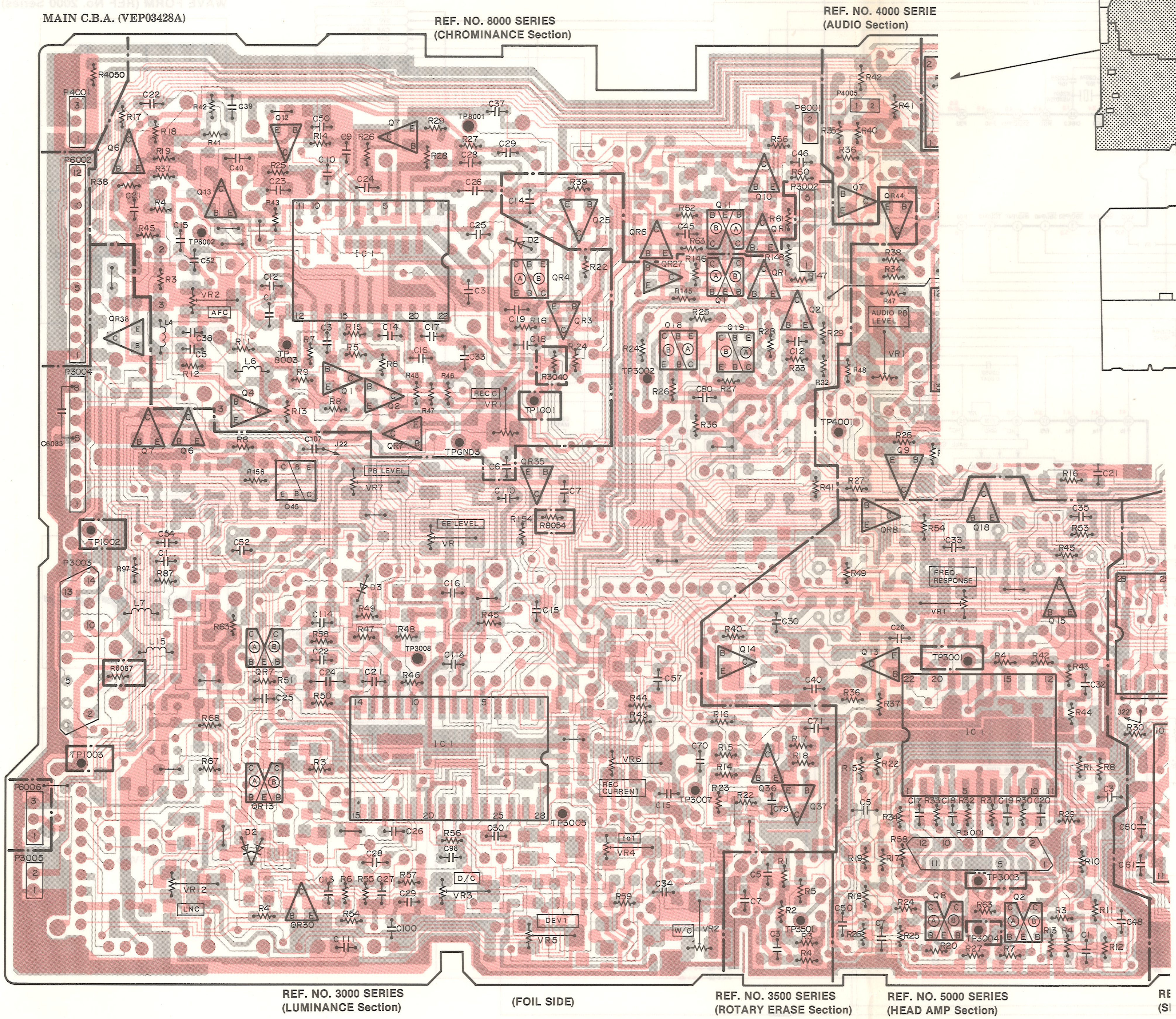

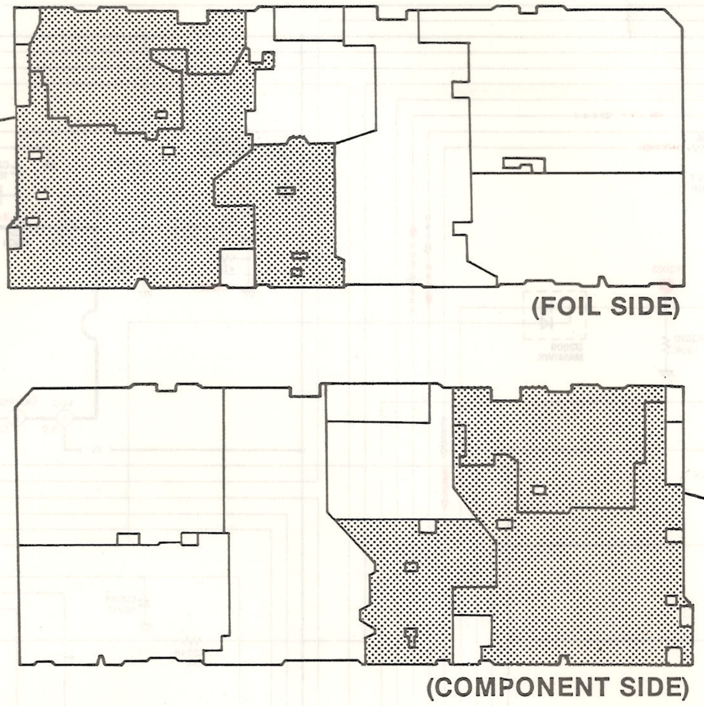

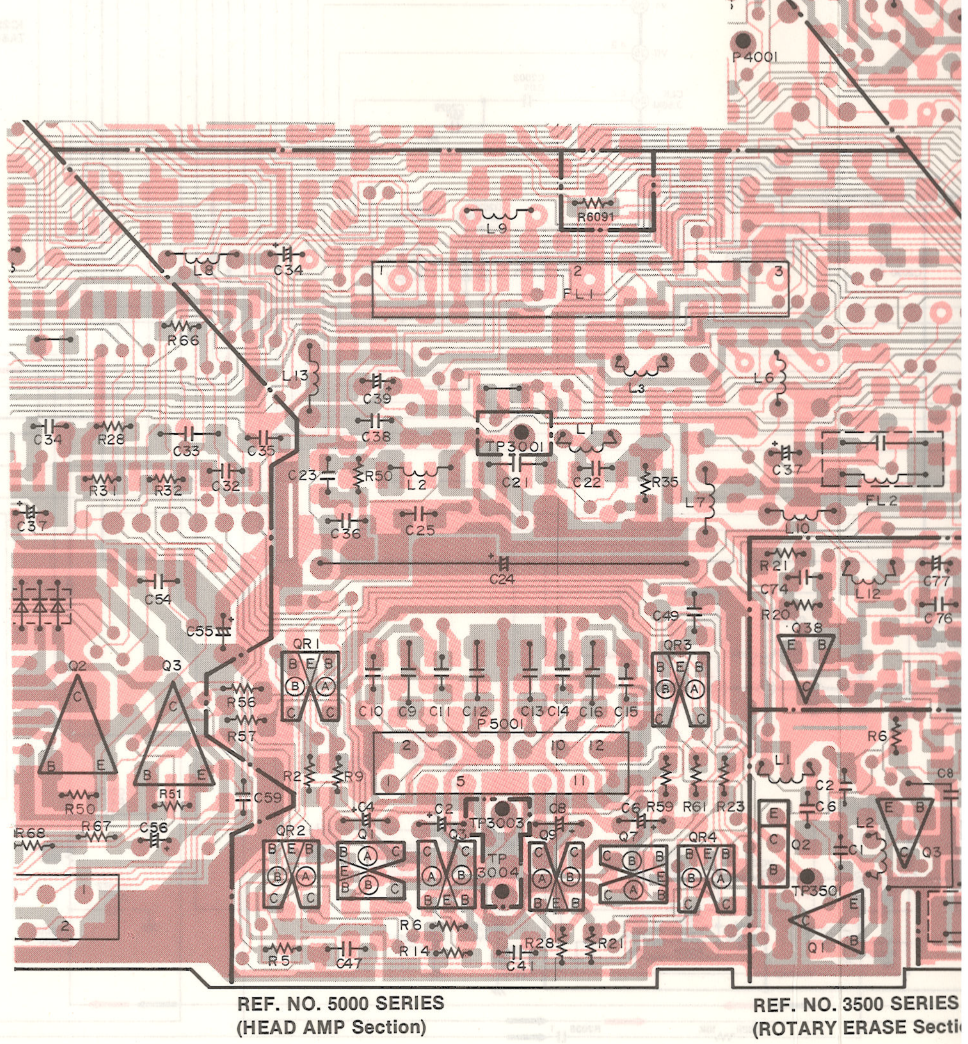

Main C.B.A. (VEP03482A)

LUMINANCE, CHROMINANCE & HEAD AMP Section

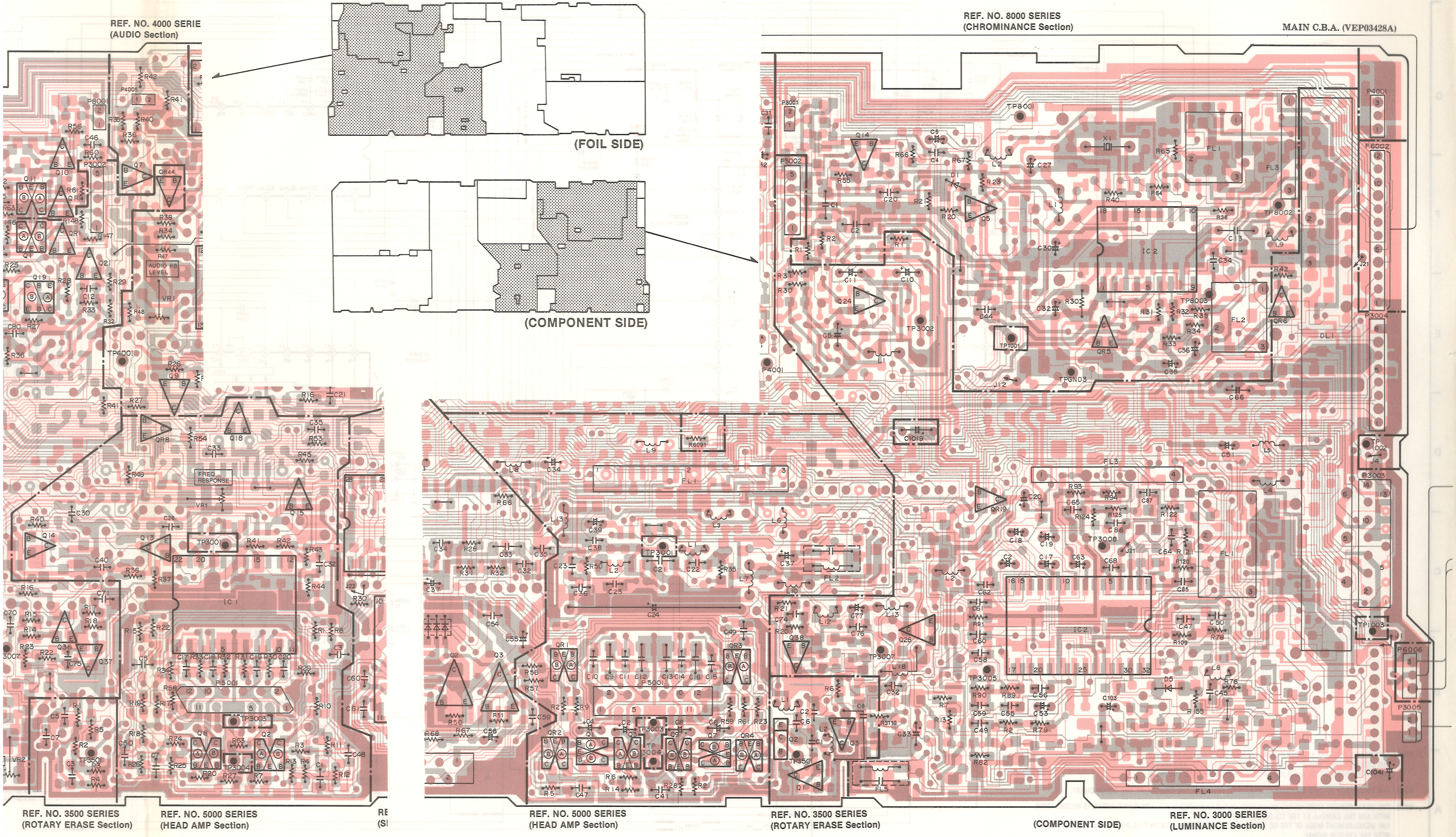

Next Page:
SERVO Section

3-21. SERVO SCHEMATIC DIAGRAM

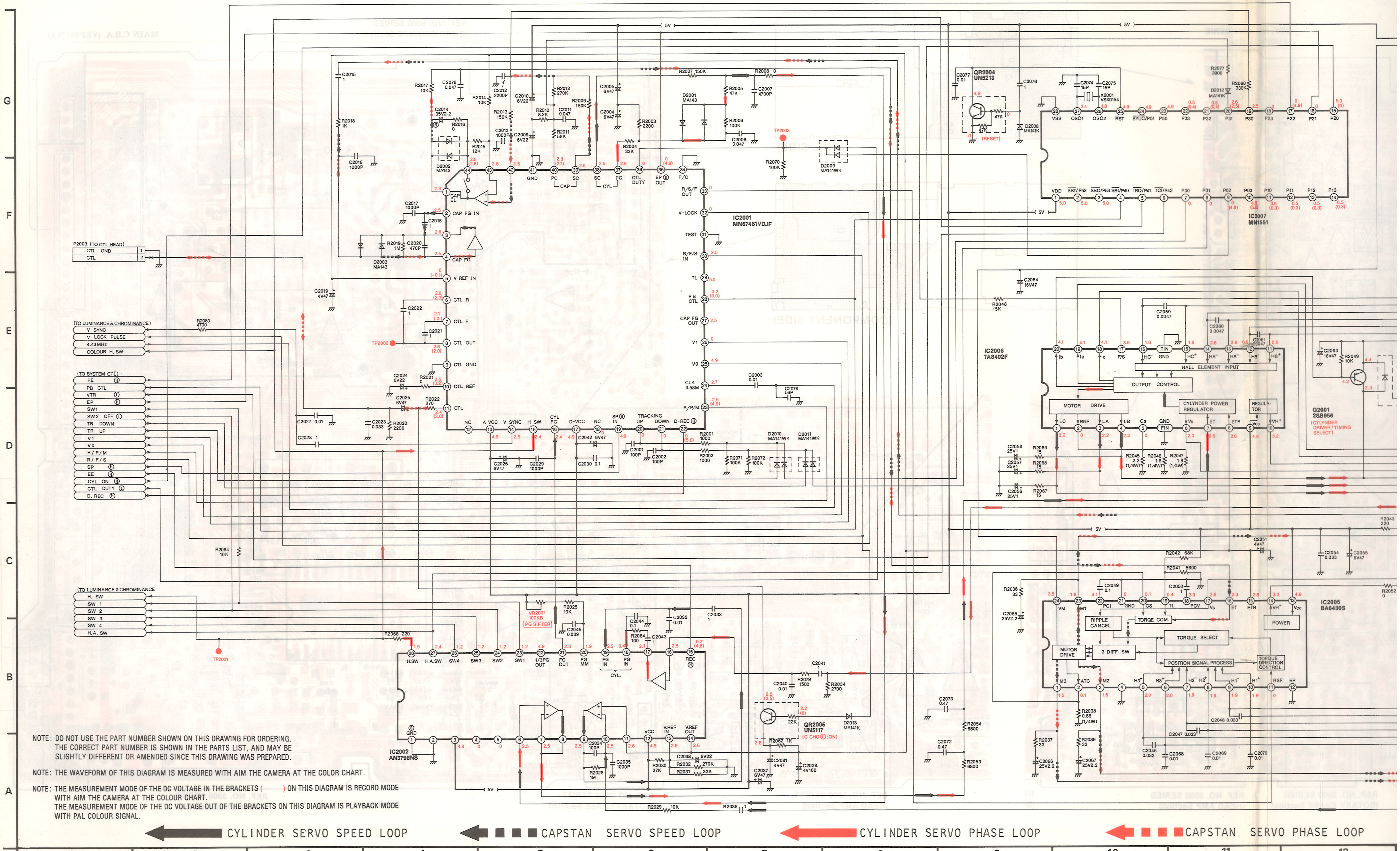

NOTE: DO NOT USE THE PART NUMBER SHOWN ON THIS DRAWING FOR ORDERING. THE CORRECT PART NUMBER IS SHOWN IN THE PARTS LIST, AND MAY BE SLIGHTLY DIFFERENT OR AMENDED SINCE THIS DRAWING WAS PREPARED.

NOTE: THE WAVEFORM OF THIS DIAGRAM IS MEASURED WITH AIM THE CAMERA AT THE COLOR CHART.

NOTE: THE MEASUREMENT MODE OF THE DC VOLTAGE IN THE BRACKETS ( ) ON THIS DIAGRAM IS RECORD MODE WITH AIM THE CAMERA AT THE COLOUR CHART. THE MEASUREMENT MODE OF THE DC VOLTAGE OUT OF THE BRACKETS ON THIS DIAGRAM IS PLAYBACK MODE WITH PAL COLOUR SIGNAL.

CYLINDER SERVO SPEED LOOP — CAPSTAN SERVO SPEED LOOP — CYLINDER SERVO PHASE LOOP — CAPSTAN SERVO PHASE LOOP

1 2 3 4 5 6 7 8 9 10 11 12

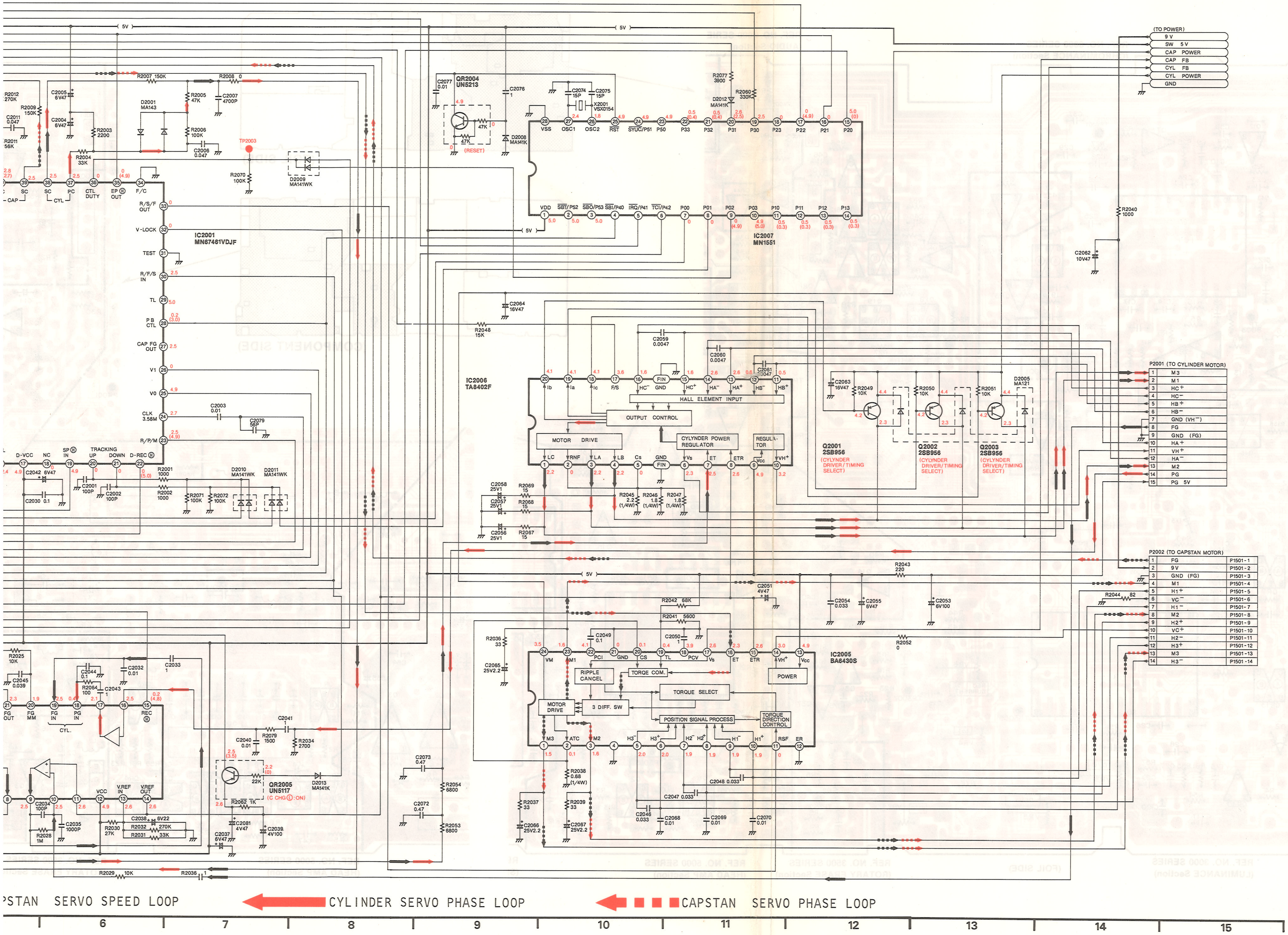

SERVO CIRCUIT TP (Test Point) WAVE FORM (REF No. 2000 Series)

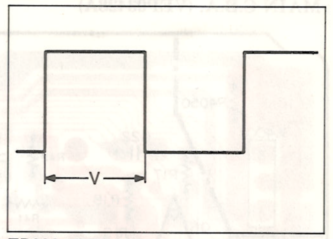

TP2001 REC/PLAY
2V/10msec. div. 4Vp-p

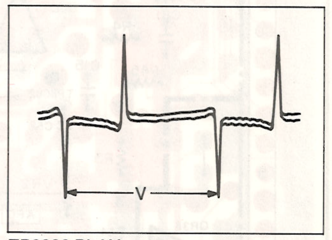

TP2002 PLAY
1V/10msec. div. 3.8Vp-p

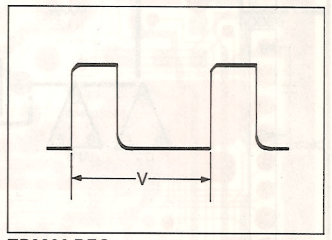

TP2002 REC
2V/10msec. div. 5Vp-p

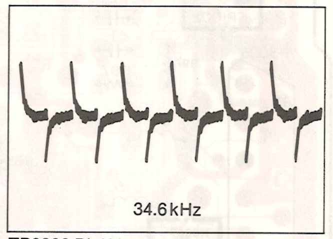

TP2003 PLAY
5mV/20μsec. div. 150mVp-p

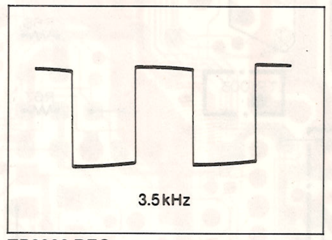

TP2003 REC
2V/20msec. div. 5Vp-p

3-22. SERVO Section In Main C.B.A. (VEP03482A)

REF. NO. 6000 SERIES
(SYSTEM CONTROL Section)

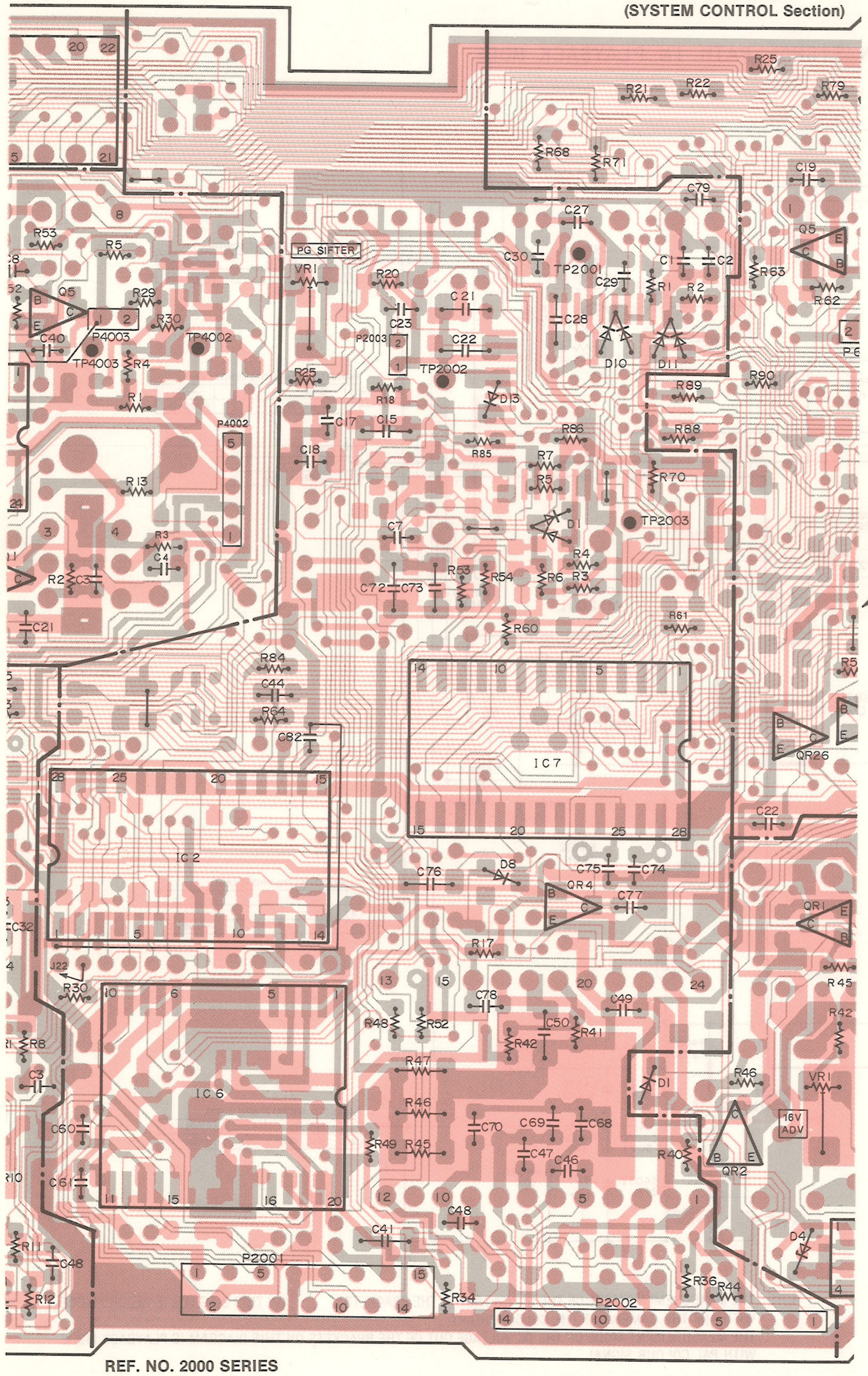

REF. NO. 2000 SERIES
(SERVO Section)

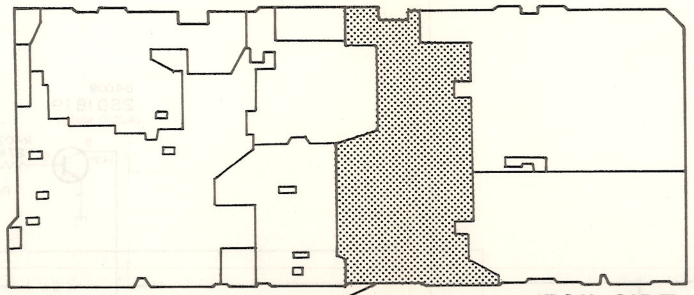

(FOIL SIDE)

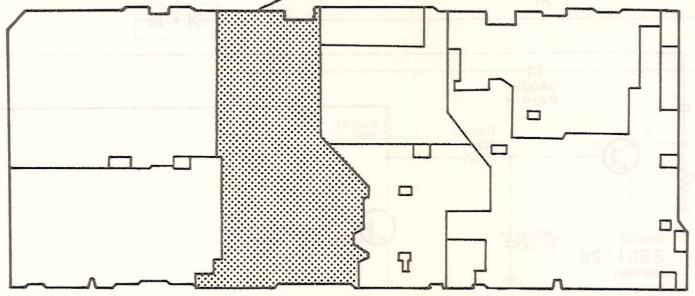

(COMPONENT SIDE)

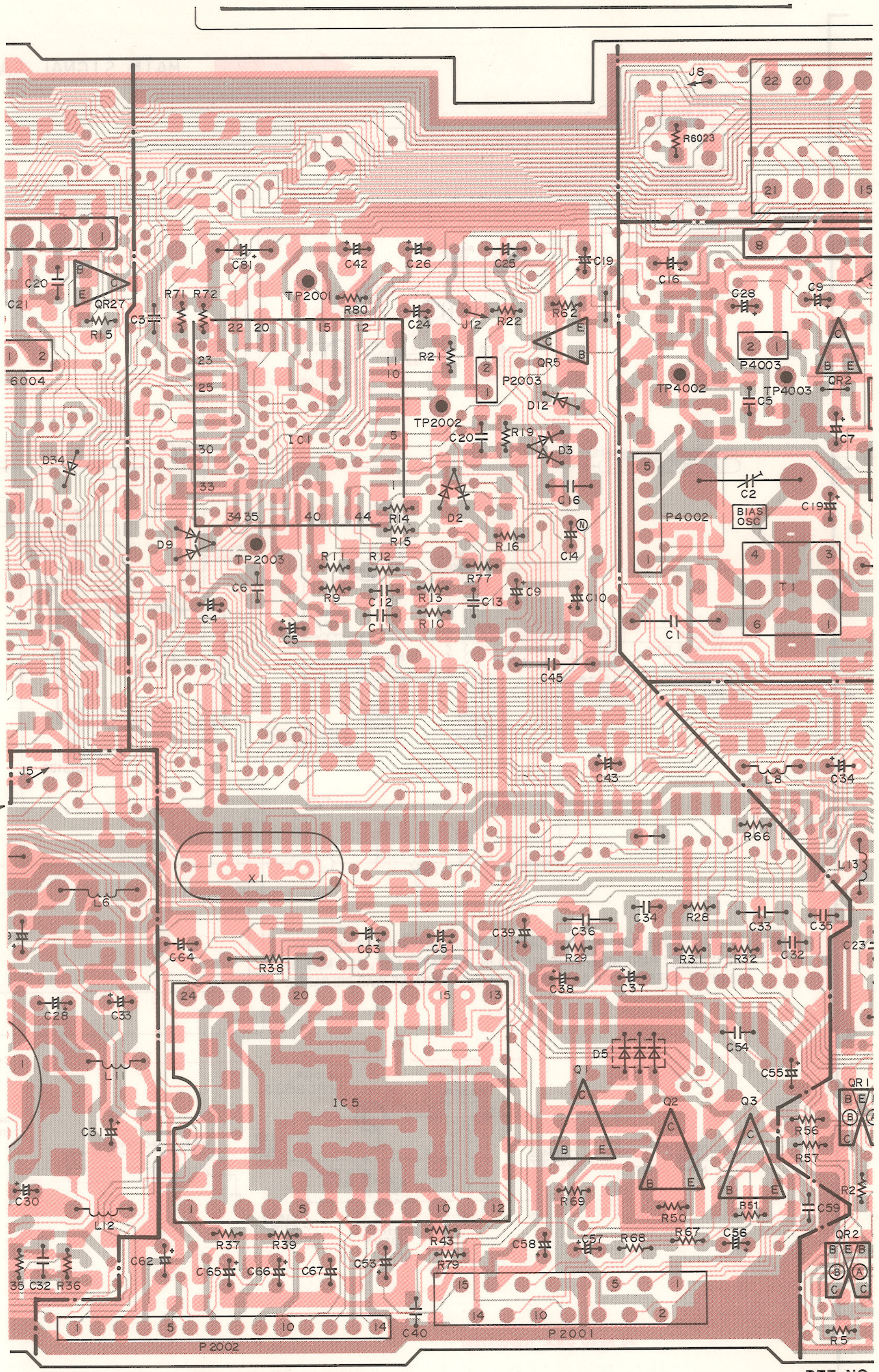

REF. NO. 2000 SERIES
(SERVO Section)

REF. NO.
(HEAD AI

3-23. AUDIO SCHEMATIC DIAGRAM

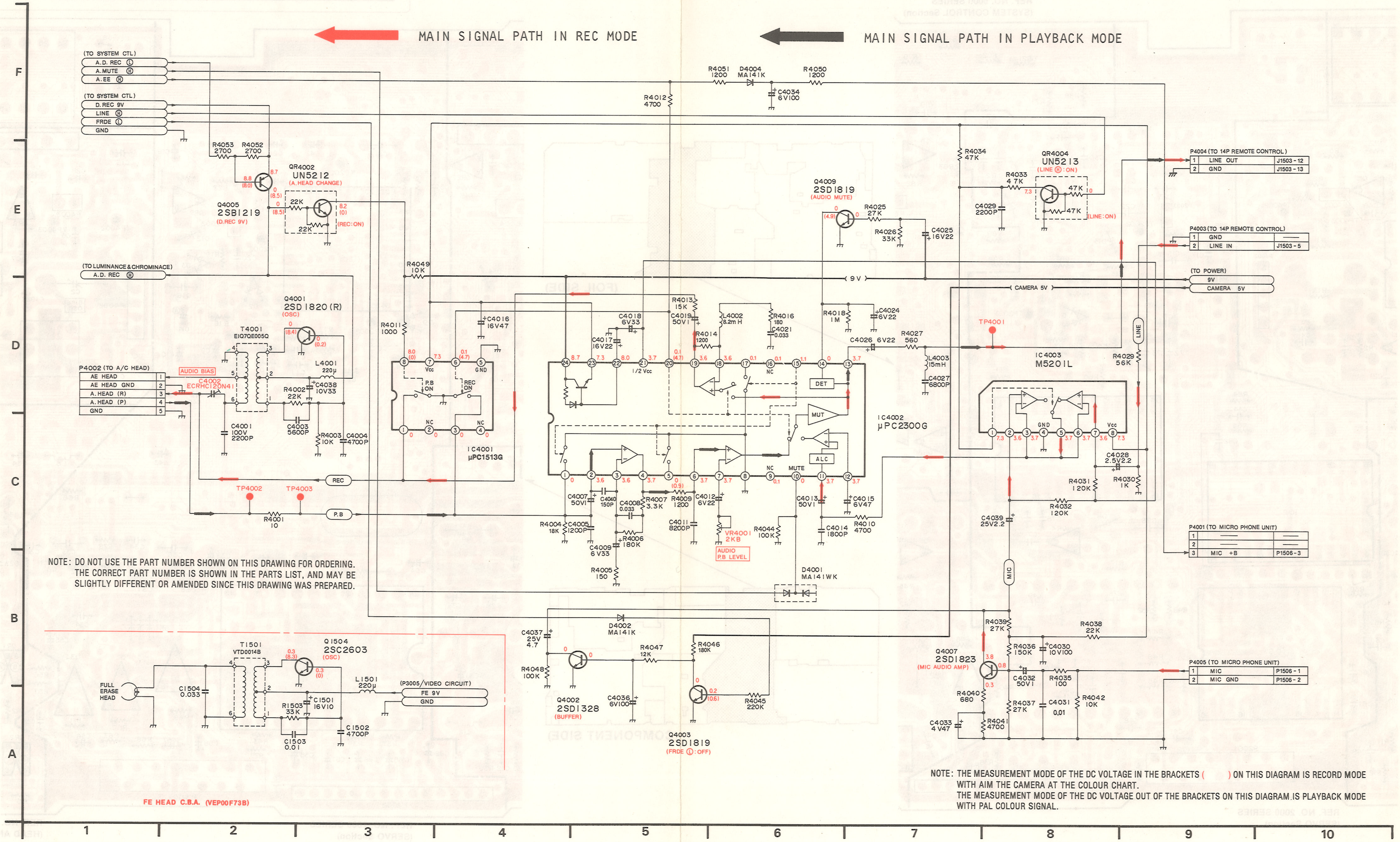

NOTE: DO NOT USE THE PART NUMBER SHOWN ON THIS DRAWING FOR ORDERING.
THE CORRECT PART NUMBER IS SHOWN IN THE PARTS LIST, AND MAY BE SLIGHTLY DIFFERENT OR AMENDED SINCE THIS DRAWING WAS PREPARED.

NOTE: THE MEASUREMENT MODE OF THE DC VOLTAGE IN THE BRACKETS ( ) ON THIS DIAGRAM IS RECORD MODE WITH AIM THE CAMERA AT THE COLOUR CHART.
THE MEASUREMENT MODE OF THE DC VOLTAGE OUT OF THE BRACKETS ON THIS DIAGRAM IS PLAYBACK MODE WITH PAL COLOUR SIGNAL.

Back Page:
SERVO Section

3-24. AUDIO Section In Main C.B.A. (VEP03482A)

REF. NO. 4000 SERIES
(AUDIO Section)

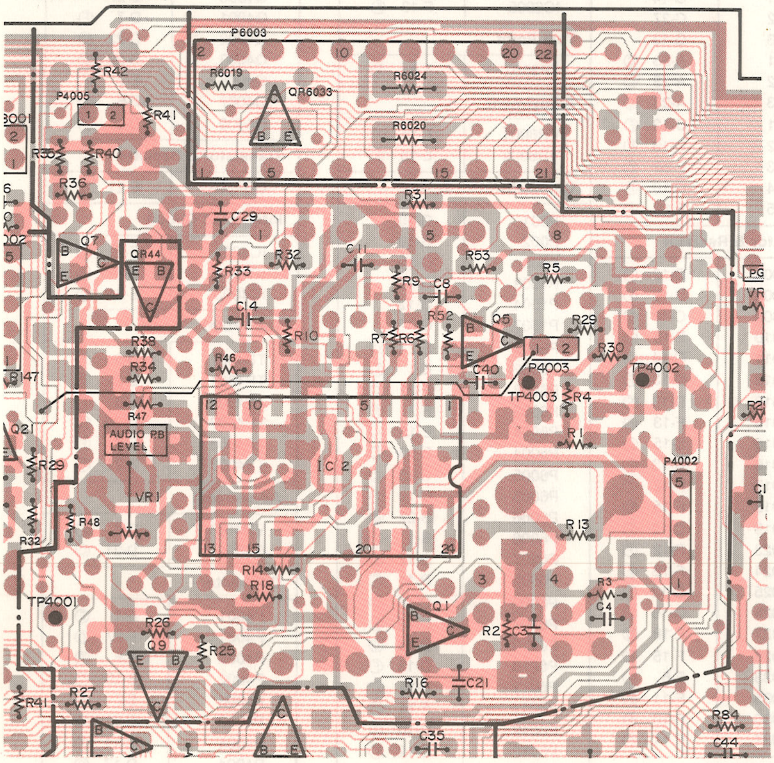

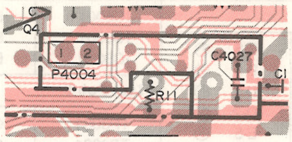

MAIN C.B.A. (VEP

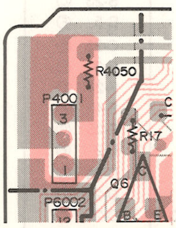

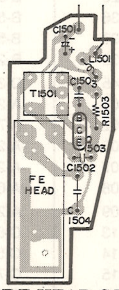

F.E HEAD C.B.A.
(VEP00F73B)

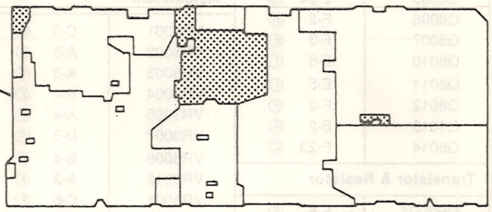

(FOIL SIDE)

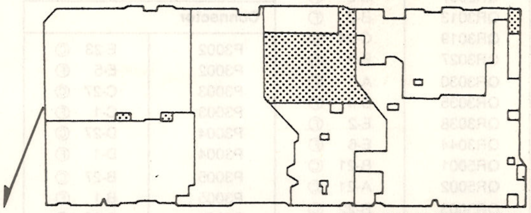

(COMPONENT SIDE)

REF. NO. 4000 SERIES
(AUDIO Section)

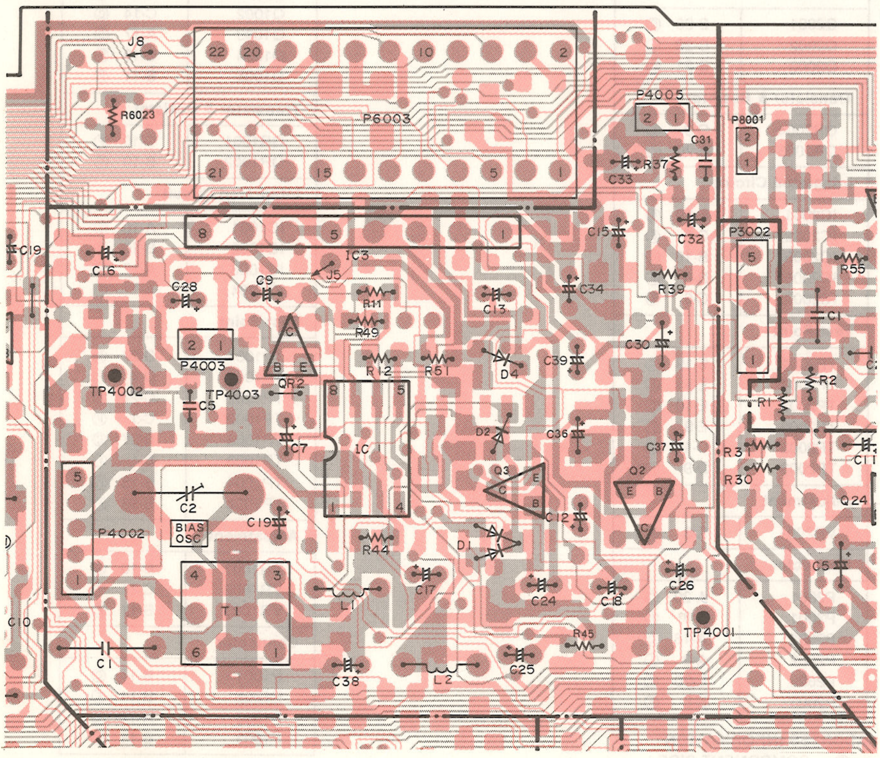

MAIN C.B.A. (VEP03428A)

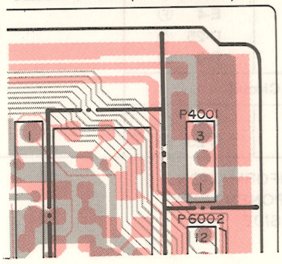

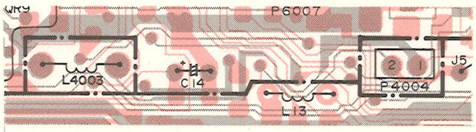

MAIN C.B.A. ADDRESS INFORMATION

LUMINANCE, CHROMINANCE & HEAD AMP Section

Transistor

Q3001	E-5	Ⓕ
Q3002	E-5	Ⓕ
Q3006	D-2	Ⓕ
Q3007	D-2	Ⓕ
Q3018	E-5	Ⓕ
Q3019	E-5	Ⓕ
Q3024	D-23	Ⓒ
Q3025	E-4	Ⓕ
Q3026	B-23	Ⓒ
Q3036	B-5	Ⓕ
Q3037	B-5	Ⓕ
Q3038	B-23	Ⓒ
Q3045	D-3	Ⓕ
Q5001	A-21	Ⓒ
Q5002	A-7	Ⓕ
Q5003	A-21	Ⓒ
Q5007	A-22	Ⓒ
Q5008	A-6	Ⓕ
Q5009	A-22	Ⓒ
Q5013	C-6	Ⓕ
Q5014	C-5	Ⓕ
Q5015	C-7	Ⓕ
Q5018	C-6	Ⓕ
Q8001	D-3	Ⓕ
Q8002	D-3	Ⓕ
Q8004	D-2	Ⓕ
Q8005	E-24	Ⓒ
Q8006	F-2	Ⓕ
Q8007	F-3	Ⓕ
Q8010	E-5	Ⓕ
Q8011	E-5	Ⓕ
Q8012	F-2	Ⓕ
Q8013	E-2	Ⓕ
Q8014	F-23	Ⓒ

Transistor & Resistor

QR3001	E-5	Ⓕ
QR3006	D-26	Ⓒ
QR3007	C-2	Ⓕ
QR3013	B-2	Ⓕ
QR3019	C-24	Ⓒ
QR3027	E-5	Ⓕ
QR3030	A-3	Ⓕ
QR3035	D-4	Ⓕ
QR3038	E-2	Ⓕ
QR3044	E-6	Ⓕ
QR5001	B-21	Ⓒ
QR5002	A-21	Ⓒ
QR5003	B-22	Ⓒ
QR5004	A-22	Ⓒ
QR5008	C-6	Ⓕ
QR8001	E-5	Ⓕ
QR8003	E-4	Ⓕ
QR8004	E-4	Ⓕ
QR8005	D-25	Ⓒ
QR8007	D-3	Ⓕ

Integrated Circuit

IC3001	B-3	Ⓕ
IC3002	C-25	Ⓒ
IC5001	B-6	Ⓕ
IC8001	E-3	Ⓕ
IC8002	E-25	Ⓕ

Test Point

TP3001	C-22	Ⓒ
TP3001	C-6	Ⓕ
TP3002	D-23	Ⓒ
TP3002	D-4	Ⓕ
TP3003	A-22	Ⓒ
TP3003	A-6	Ⓕ
TP3004	A-22	Ⓒ
TP3004	A-6	Ⓕ
TP3005	B-24	Ⓒ
TP3005	B-4	Ⓕ
TP3007	B-23	Ⓒ
TP3007	B-5	Ⓕ
TP3008	C-25	Ⓒ
TP3008	C-3	Ⓕ
TP8001	F-24	Ⓒ
TP8001	F-4	Ⓕ
TP8002	E-26	Ⓒ
TP8002	E-2	Ⓕ
TP8003	D-25	Ⓒ
TP8003	D-2	Ⓕ
TP GND 3	D-25	Ⓒ
TP GND 3	D-3	Ⓕ

Adjustment

VR3001	C-3	Ⓕ
VR3002	A-5	Ⓕ
VR3003	A-3	Ⓕ
VR3004	B-4	Ⓕ
VR3005	A-4	Ⓕ
VR3007	D-3	Ⓕ
VR3008	B-4	Ⓕ
VR3012	A-2	Ⓕ
VR5001	C-6	Ⓕ
VR8001	D-4	Ⓕ
VR8002	E-2	Ⓕ

Connector

P3002	E-23	Ⓒ
P3002	E-5	Ⓕ
P3003	C-27	Ⓒ
P3003	C-1	Ⓕ
P3004	D-27	Ⓒ
P3004	D-1	Ⓕ
P3005	B-27	Ⓒ
P3005	B-1	Ⓕ
P5001	B-22	Ⓒ
P5001	B-6	Ⓕ
P8001	F-24	Ⓒ
P8001	F-5	Ⓕ

ADDRESS INFORMATION
Ⓒ ··· COMPONENT SIDE
Ⓕ ··· FOIL SIDE

SYSTEM CONTROL Section

Transistor

Q1501	G-14	
Q1502	C-27	
Q1503	G-13	
Q3501	A-23	Ⓒ
Q3502	A-23	Ⓒ
Q3503	A-23	Ⓒ
Q6001	D-12	Ⓕ
Q6002	C-13	Ⓕ
Q6003	F-13	Ⓕ
Q6004	C-10	Ⓕ
Q6005	E-10	Ⓕ

Transistor & Resistor

QR6003	D-12	Ⓕ
QR6004	D-12	Ⓕ
QR6009	C-16	Ⓒ
QR6010	F-15	Ⓒ
QR6011	C-14	Ⓒ
QR6012	D-13	Ⓕ
QR6013	D-13	Ⓕ
QR6014	F-13	Ⓕ
QR6015	E-15	Ⓒ
QR6016	D-13	Ⓕ
QR6017	F-12	Ⓕ
QR6018	F-15	Ⓒ
QR6019	C-12	Ⓕ
QR6023	F-12	Ⓕ
QR6024	F-12	Ⓕ
QR6025	C-12	Ⓕ
QR6026	C-10	Ⓕ
QR6027	E-18	Ⓒ
QR6028	F-15	Ⓒ
QR6033	F-6	Ⓕ
QR6035	F-11	Ⓕ
QR6036	F-10	Ⓕ
QR6037	F-11	Ⓕ

Integrated Circuit

IC6001	D-16	Ⓒ
IC6002	D-15	Ⓒ
IC6003	E-13	Ⓕ
IC6004	F-17	Ⓒ
IC6005	F-13	Ⓕ

Test Point

TP3501	A-1	Ⓕ

Adjustment

VR6001	E-11	Ⓕ
VR6002	E-13	Ⓕ

Connector

P001	G-19	
P002	G-19	
P003	G-19	
P1503	G-12	
P1504	G-12	
P1507	G-17	
P6002	E-27	Ⓒ
P6002	E-1	Ⓕ
P6003	F-21	Ⓒ
P6003	F-7	Ⓕ
P6004	E-18	Ⓒ
P6004	E-10	Ⓕ
P6005	C-15	Ⓒ
P6005	C-13	Ⓕ
P6006	B-27	Ⓒ
P6006	B-1	Ⓕ
P6007	D-17	Ⓒ
P6007	D-11	Ⓕ
P6009	C-15	Ⓒ
P6009	C-13	Ⓕ
P6010	D-15	Ⓒ
P6010	D-13	Ⓕ
P6011	E-14	Ⓒ
P6011	F-14	Ⓕ
P6012	C-16	Ⓒ
P6012	C-12	Ⓕ
P6013	E-15	Ⓒ
P6013	E-13	Ⓕ

ADDRESS INFORMATION
Ⓒ ··· COMPONENT SIDE
Ⓕ ··· FOIL SIDE

SERVO Section

Transistor

Q2001	B-20	Ⓒ
Q2002	B-20	Ⓒ
Q2003	B-21	Ⓒ

Transistor & Resistor

QR2004	C-9	Ⓕ
QR2005	E-20	Ⓒ

Integrated Circuit

IC2001	E-19	Ⓒ
IC2002	C-8	Ⓕ
IC2005	B-19	Ⓒ
IC2006	B-8	Ⓕ
IC2007	C-9	Ⓕ

Test Point

TP2001	E-19	Ⓒ
TP2001	E-9	Ⓕ
TP2002	E-19	Ⓒ
TP2002	E-9	Ⓕ
TP2003	D-19	Ⓒ
TP2003	D-9	Ⓕ

Adjustment

VR2001	E-8	Ⓕ

Connector

P2001	A-20	Ⓒ
P2001	A-8	Ⓕ
P2002	A-18	Ⓒ
P2002	A-9	Ⓕ
P2003	E-20	Ⓒ
P2003	E-8	Ⓕ

ADDRESS INFORMATION
Ⓒ ··· COMPONENT SIDE
Ⓕ ··· FOIL SIDE

AUDIO Section

Transistor

Q1503	B-27	
Q4001	D-7	Ⓕ
Q4002	D-22	Ⓒ
Q4003	D-22	Ⓒ
Q4005	E-7	Ⓕ
Q4007	E-6	Ⓕ
Q4009	D-6	Ⓕ

Transistor & Resistor

QR4002	E-21	Ⓒ

Integrated Circuit

IC4001	E-21	Ⓒ
IC4002	E-7	Ⓕ
IC4003	E-21	Ⓒ

Test Point

TP4001	D-6	Ⓕ
TP4001	D-22	Ⓒ
TP4002	E-8	Ⓕ
TP4002	D-20	Ⓒ
TP4003	E-7	Ⓕ
TP4003	E-21	Ⓒ

Adjustment

VR4001	D-6	Ⓕ
C4002	D-21	Ⓒ

Connector

P4001	F-1	Ⓕ
P4001	F-27	Ⓒ
P4002	E-8	Ⓕ
P4002	E-20	Ⓒ
P4003	E-7	Ⓕ
P4003	E-21	Ⓒ
P4004	C-11	Ⓕ
P4004	D-17	Ⓒ
P4005	F-6	Ⓕ
P4005	F-22	Ⓒ

ADDRESS INFORMATION
Ⓒ ··· COMPONENT SIDE
Ⓕ ··· FOIL SIDE

POWER SUPPLY Section

Transistor

Q1001	B-12	Ⓕ
Q1002	C-14	Ⓒ
Q1003	A-17	Ⓒ
Q1004	C-13	Ⓕ
Q1005	B-11	Ⓕ

Transistor & Resistor

QR1001	C-10	Ⓕ
QR1002	B-10	Ⓕ

Integrated Circuit

IC1001	A-16	Ⓒ
IC1002	B-16	Ⓒ
IC1003	A-17	Ⓒ
IC1004	A-11	Ⓕ

Test Point

TP1001	D-24	Ⓒ
TP1001	D-4	Ⓕ
TP1002	C-27	Ⓒ
TP1002	C-1	Ⓕ
TP1003	B-27	Ⓒ
TP1003	B-1	Ⓕ
TP1004	B-15	Ⓒ
TP1004	B-13	Ⓕ

Adjustment

VR1001	B-10	Ⓕ
VR1002	C-11	Ⓕ
VR1003	B-11	Ⓕ

Connector

P1001	B-14	Ⓒ
P1001	B-14	Ⓕ
P1003	A-14	Ⓒ
P1003	B-14	Ⓕ

ADDRESS INFORMATION
Ⓒ ··· COMPONENT SIDE
Ⓕ ··· FOIL SIDE

3-25. MAIN C.B.A. (VEP03482A)

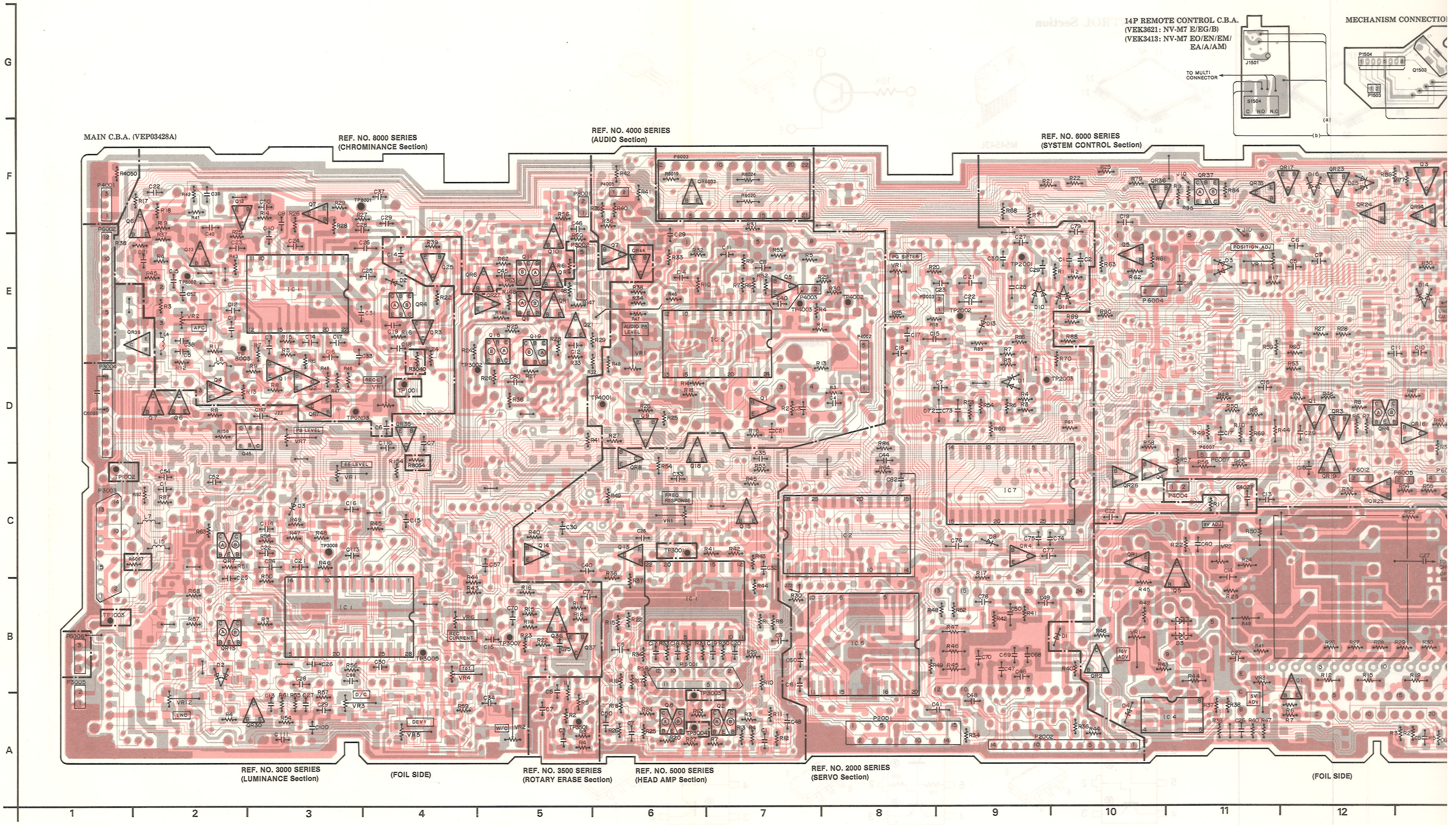

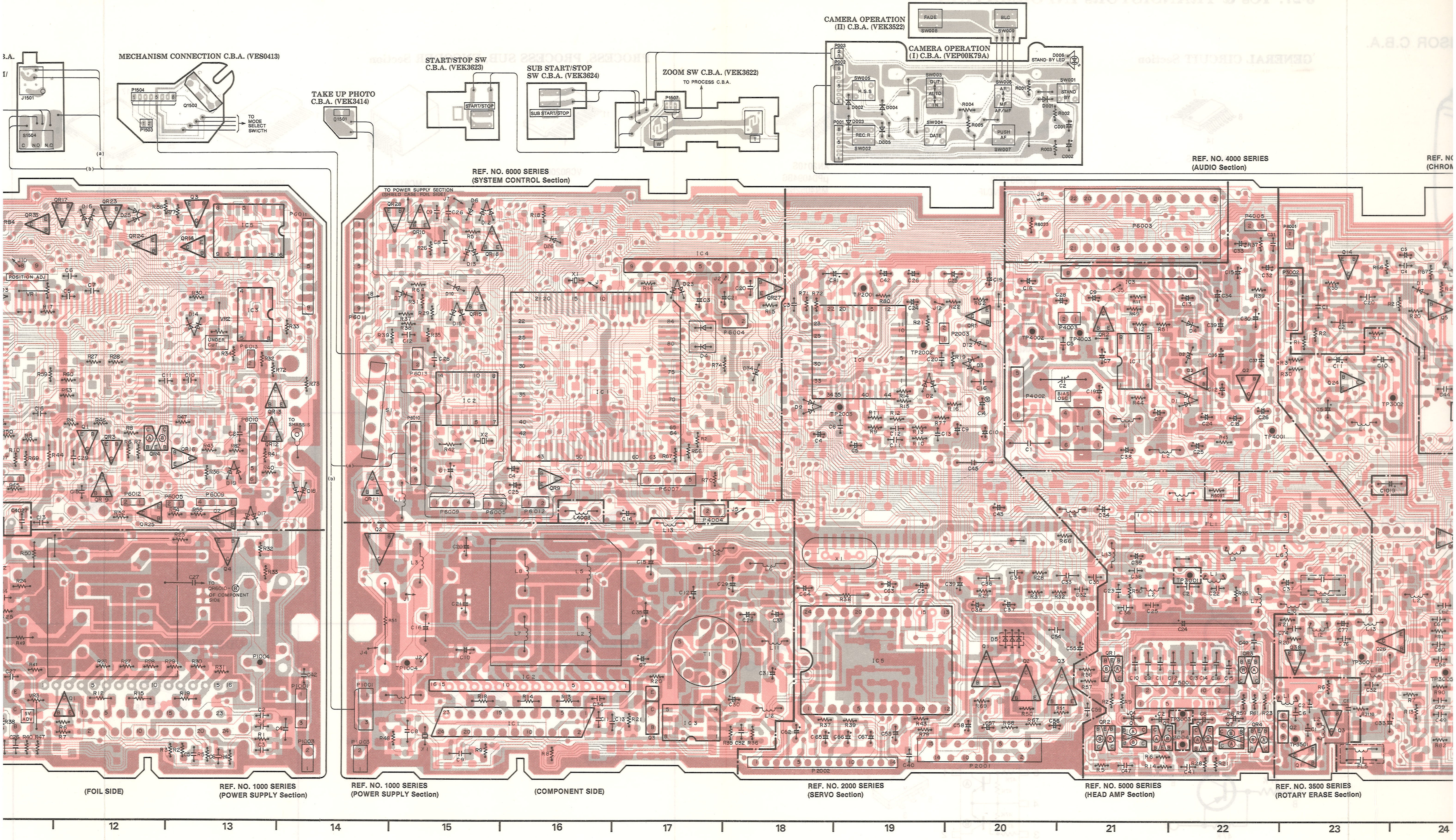
MECHANISM CONNECTION C.B.A. (VES0413)
TO MODE SELECT SWICTH
TAKE UP PHOTO C.B.A. (VEK3414)
START/STOP SW C.B.A. (VEK3623)
SUB START/STOP SW C.B.A. (VEK3624)
ZOOM SW C.B.A. (VEK3622)
TO PROCESS C.B.A.
CAMERA OPERATION (II) C.B.A. (VEK3522)
CAMERA OPERATION (I) C.B.A. (VEP00K79A)
REF. NO. 6000 SERIES (SYSTEM CONTROL Section)
TO POWER SUPPLY SECTION (SHIELD CASE FOIL SIDE)
REF. NO. 4000 SERIES (AUDIO Section)
(FOIL SIDE)
REF. NO. 1000 SERIES (POWER SUPPLY Section)
REF. NO. 1000 SERIES (POWER SUPPLY Section)
(COMPONENT SIDE)
REF. NO. 2000 SERIES (SERVO Section)
REF. NO. 5000 SERIES (HEAD AMP Section)
REF. NO. 3500 SERIES (ROTARY ERASE Section)
12
13
14
15
16
17
18
19
20
21
22
23
24

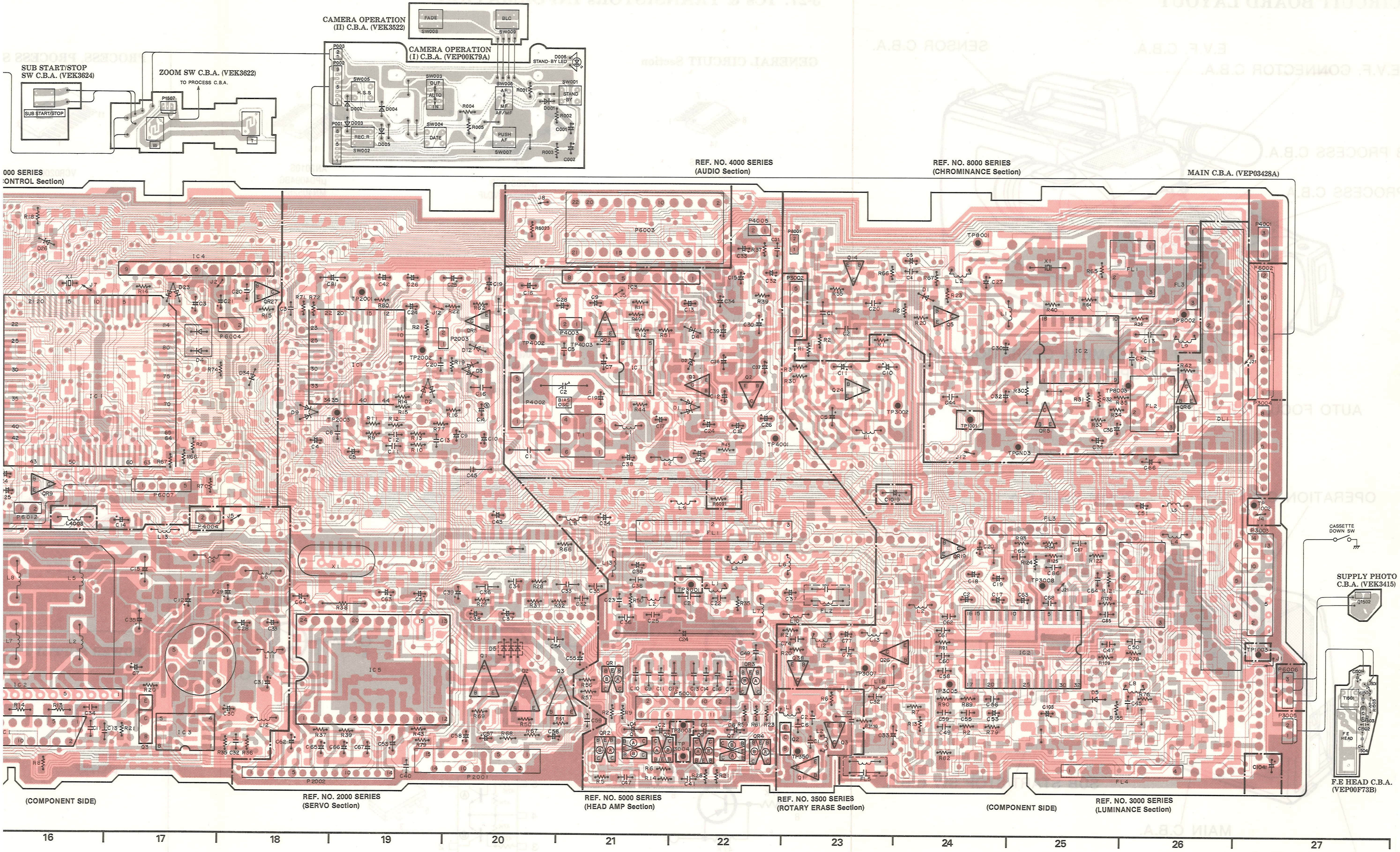

Next Page:
C.B. LAYOUT, ICs & TRANSISTOR INFORMATION Section

3-26. CIRCUIT BOARD LAYOUT

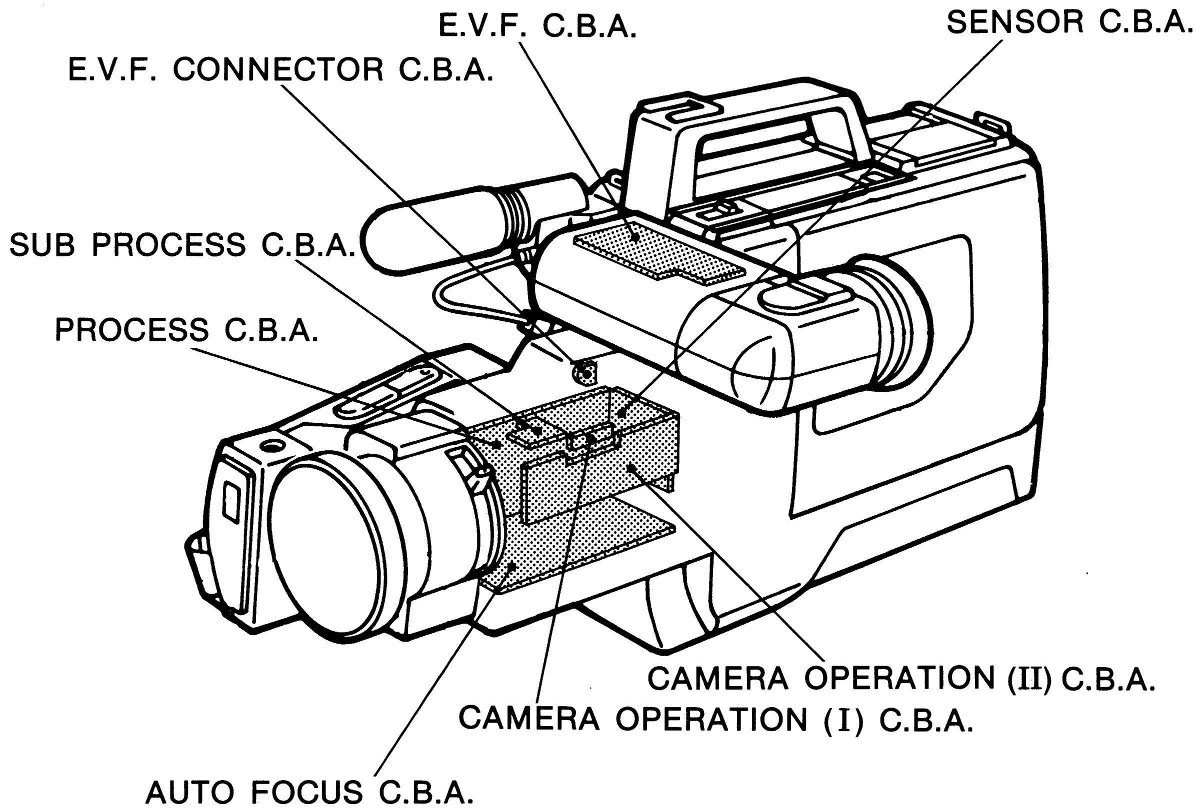

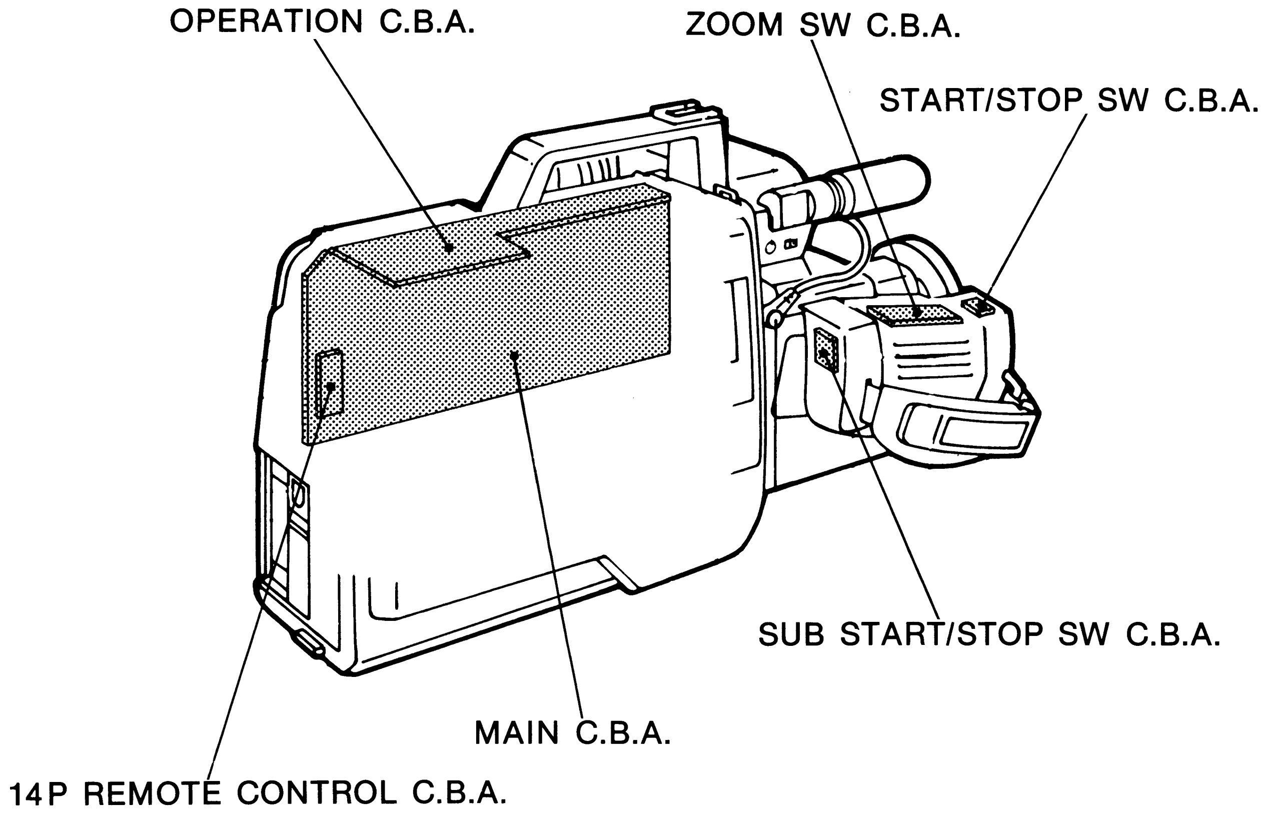

3-27. ICs & TRANSISTORs INFORMATION

GENERAL CIRCUIT Section

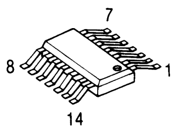

AN1324NS
S6700A

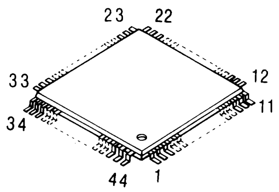

μPD9313GB
MN67461VDJF

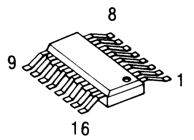

AN2010S
μPD4094BG
MN4052BS

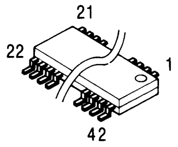

AN2583S
AN2153S

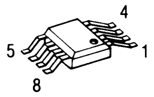

AN1358S
μPC358G2
μPC1513G
AN6914S
MJM4588MP
AN6562S
NJM3415M

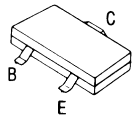

2SA812	2SC2404
2SA1022	2SC3138
2SA1255	2SC3930
2SA1532	2SC3931
2SA1610	2SC3938
2SB709	2SC4176
2SB710	2SD968A
2SB779	2SD1328
2SB956	2SD1819
2SB970	2SD1820
2SB1218	2SD1823
2SB1219	
2SB1220	

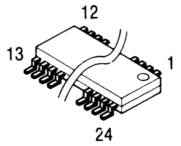

AN2510S
μPC2300G

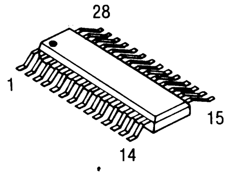

AN3798S
MN1551VYJS
AN3215S

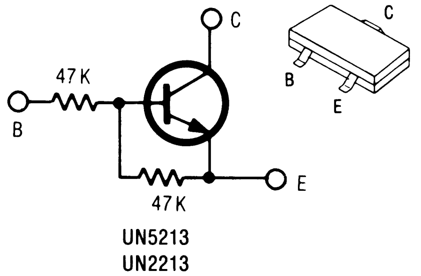

UN5213
UN2213
GA1L4M

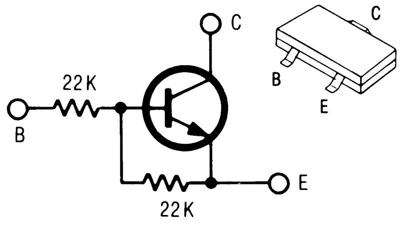

UN5212
GA1F4M

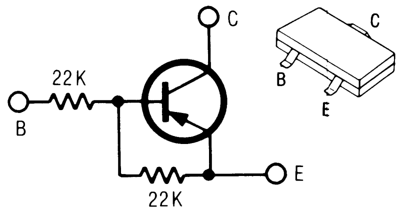

UN5112

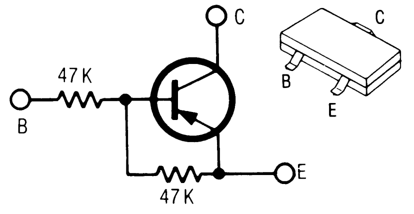

UN5113
GN1L4M
UN2113

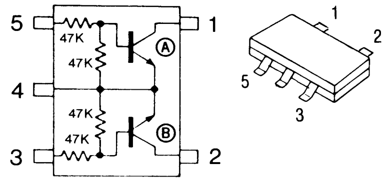

XN1213

PROCESS, PROCESS S

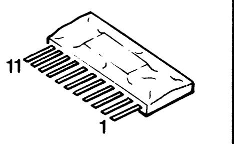

VCR0200

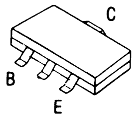

2SD874

AUTO FOCUS Section

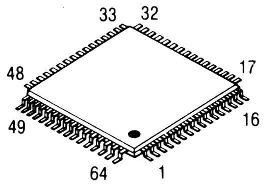

MN15865VYC

POWER SUPPLY Secti

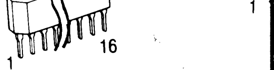

UN102
μPC393G2

S
4BG
BS

C2404
C3138
C3930
C3931
C3938
C4176
D968A
D1328
D1819
D1820
D1823

12

PROCESS, PROCESS SUB, ENCODER Section

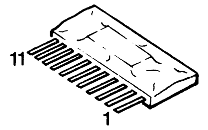

VCR0200

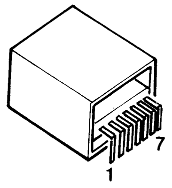

MC8181A

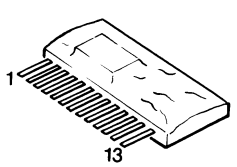

VCR0199

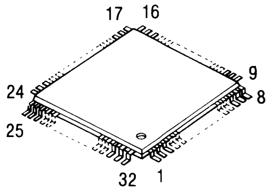

AN2253FA

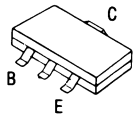

2SD874

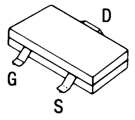

2SK316

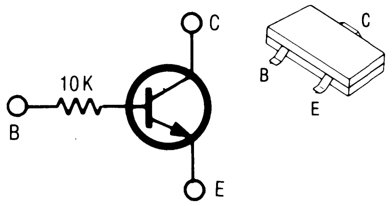

UN5215

SYSTEM CONTROL Section

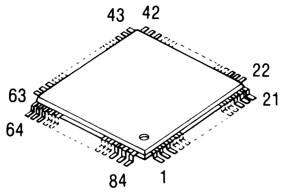

MN15361VYF

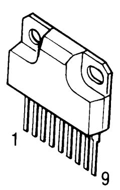

M54543L

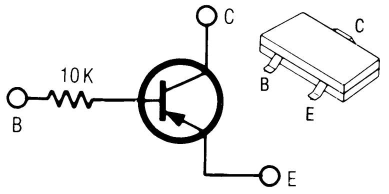

GN1A4Z

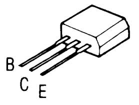

2SA1175

SERVO Section

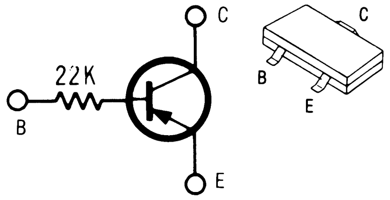

UN5117

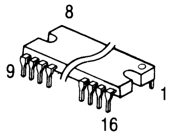

BA6430S

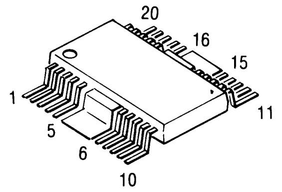

TA8402F

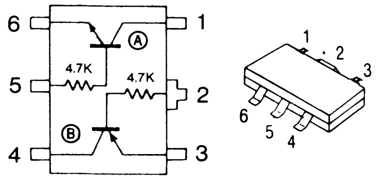

XN4316

AUTO FOCUS Section

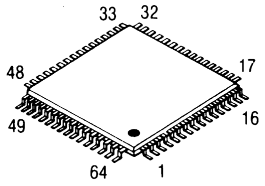

MN15865VYC

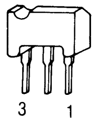

MN1280Q

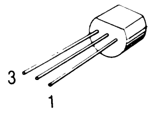

AN78N05

SENSOR, CDS Section

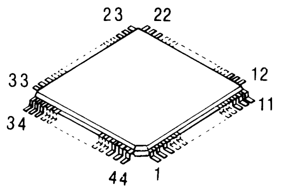

MN53015XBM

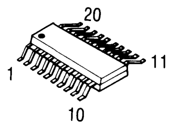

μPD6147G

POWER SUPPLY Section

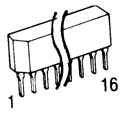

UN102
μPC393G2

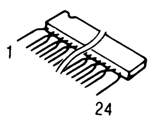

BA6149LS

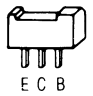

2SD1293M

AUDIO Section

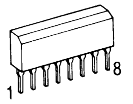

M5201L

LUMINANCE & CHROMINANCE Section

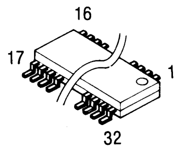

AN3321S

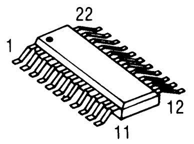

AN3311S
AN6367S

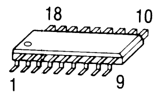

MN6163AS

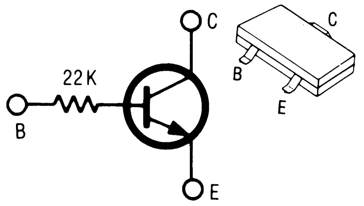

UN5217

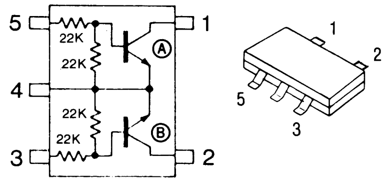

XN1212

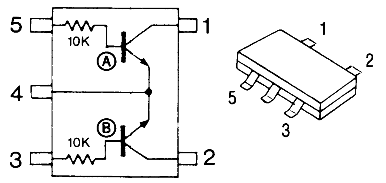

XN1215

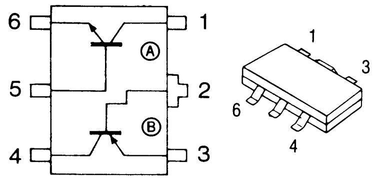

XN4601

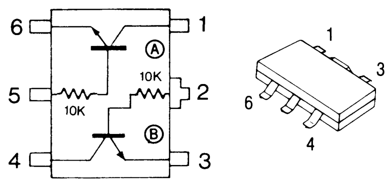

XN4201

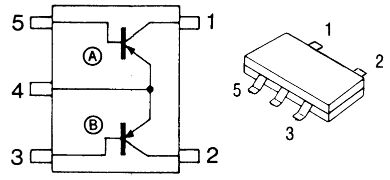

XN1401

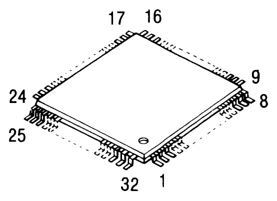

AN2253FA

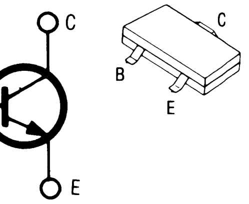

UN5215

S Section

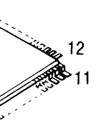

BM

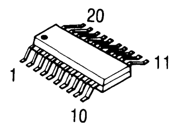

µPD6147G

Section

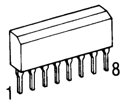

M5201L

SYSTEM CONTROL Section

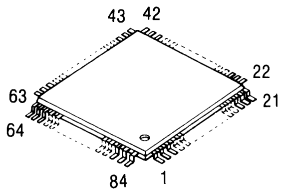

MN15361VYF

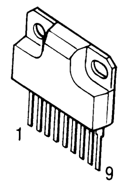

M54543L

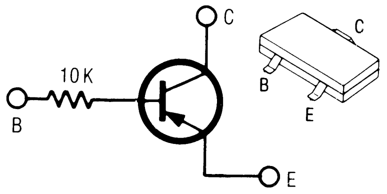

GN1A4Z

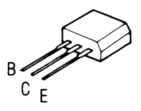

2SA1175

SERVO Section

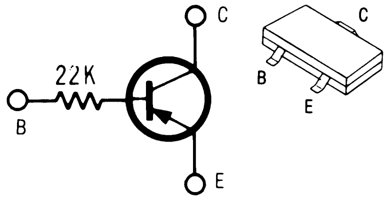

UN5117

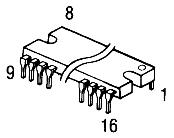

BA6430S

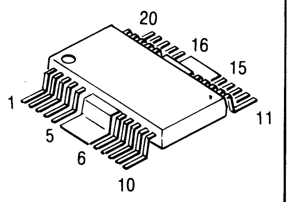

TA8402F

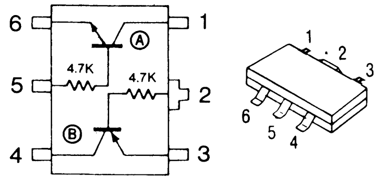

XN4316

LUMINANCE & CHROMINANCE Section

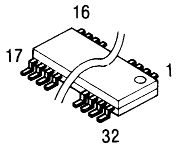

AN3321S

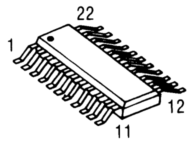

AN3311S
AN6367S

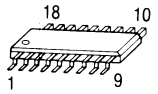

MN6163AS

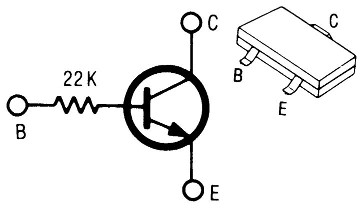

UN5217

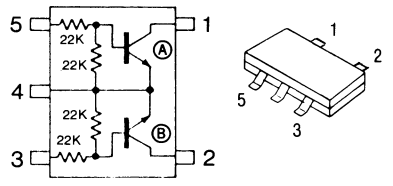

XN1212

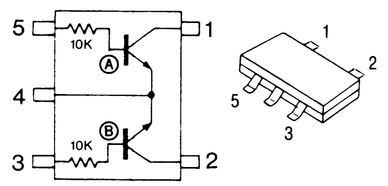

XN1215

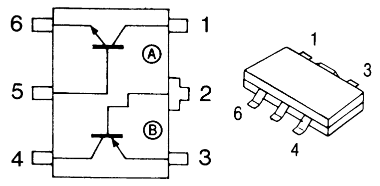

XN4601

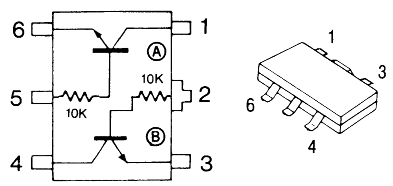

XN4201

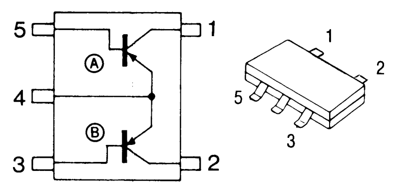

XN1401

MEMO

3-28. CAMERA INTERCONNECTION SCHEMATIC DIAGRAM

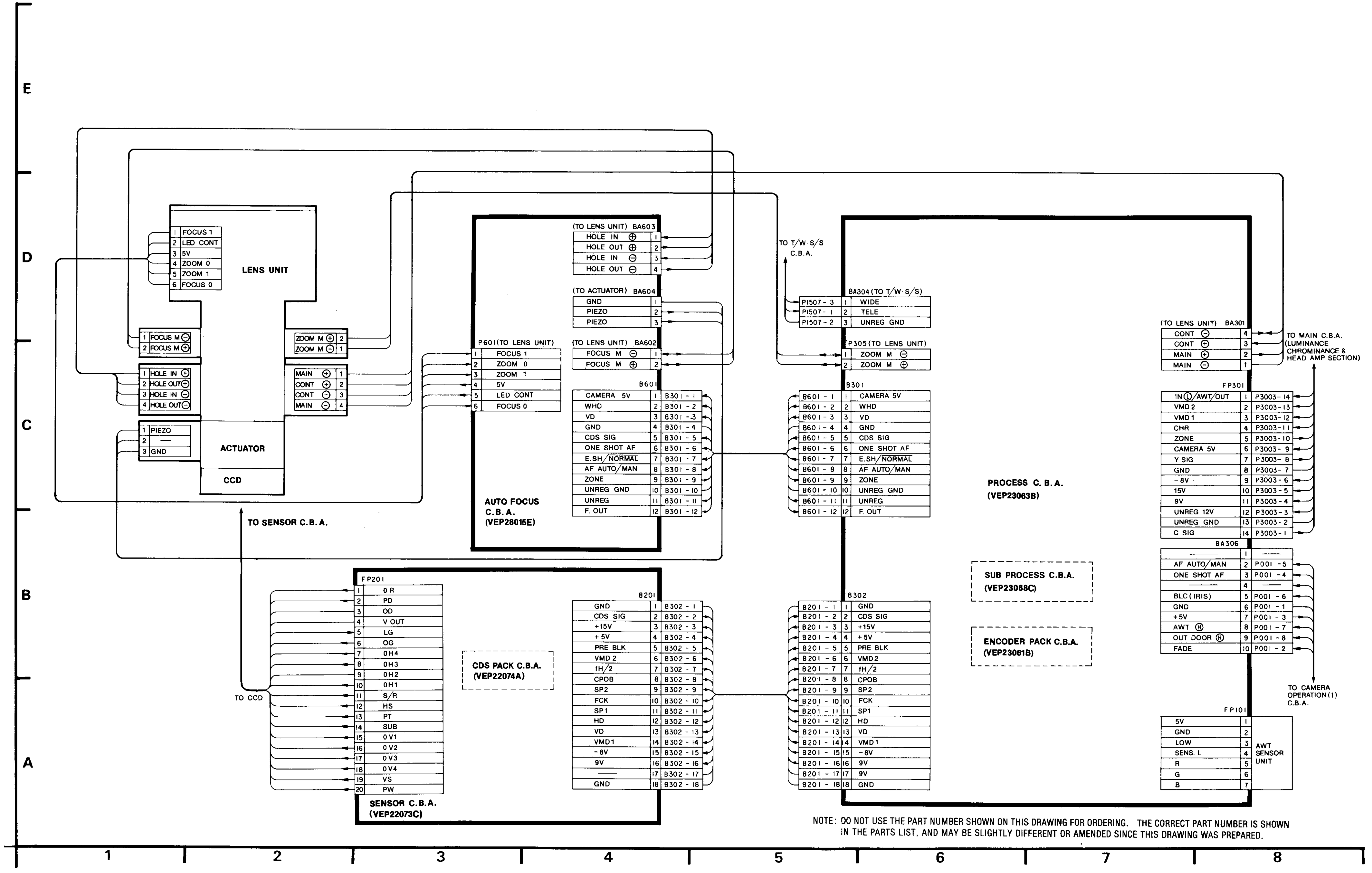

NOTE: DO NOT USE THE PART NUMBER SHOWN ON THIS DRAWING FOR ORDERING. THE CORRECT PART NUMBER IS SHOWN IN THE PARTS LIST, AND MAY BE SLIGHTLY DIFFERENT OR AMENDED SINCE THIS DRAWING WAS PREPARED.

3-29. VTR INTERCONNECTION SCHEMATIC DIAGRAM

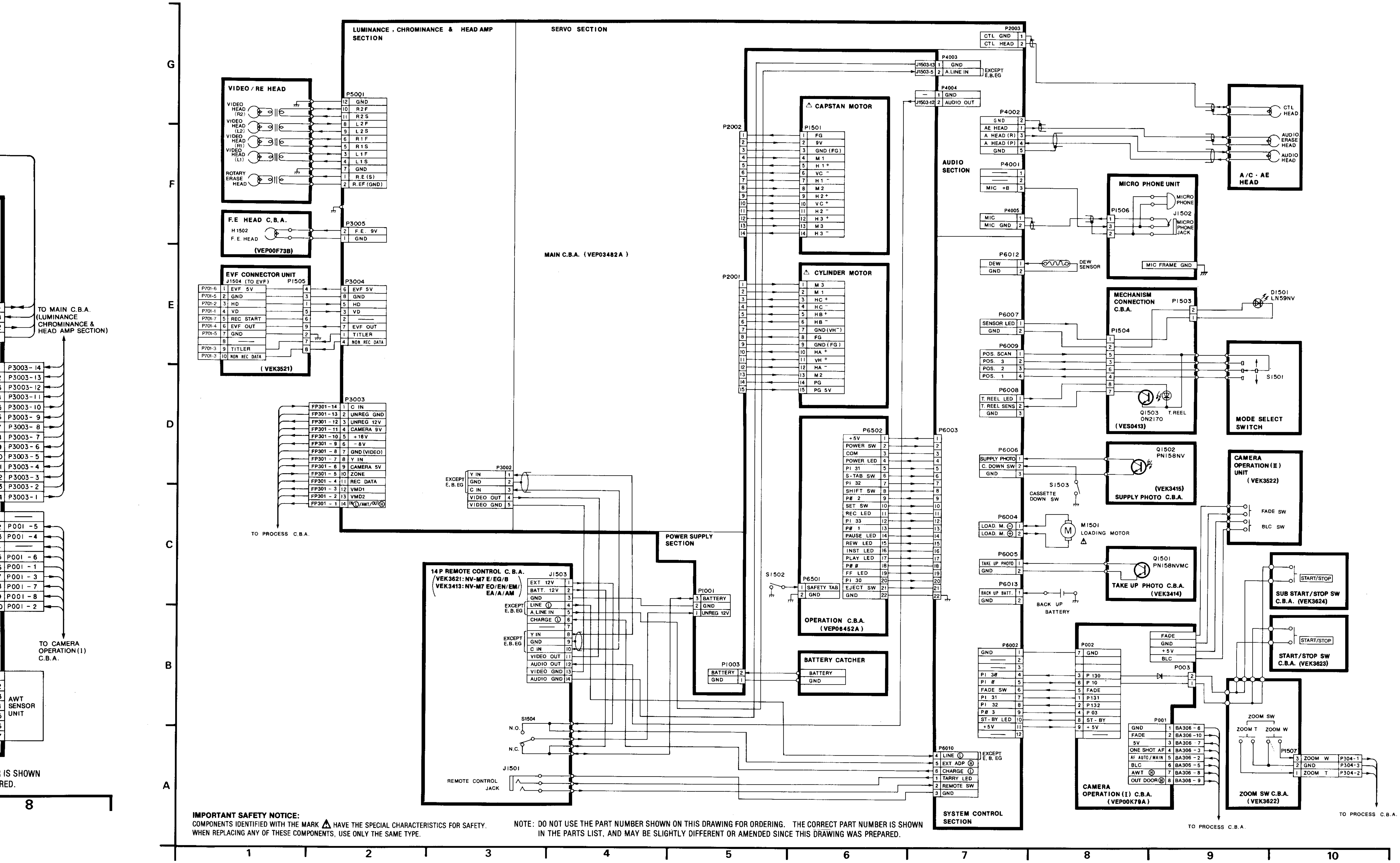

IMPORTANT SAFETY NOTICE:
COMPONENTS IDENTIFIED WITH THE MARK ⚠ HAVE THE SPECIAL CHARACTERISTICS FOR SAFETY. WHEN REPLACING ANY OF THESE COMPONENTS, USE ONLY THE SAME TYPE.

NOTE: DO NOT USE THE PART NUMBER SHOWN ON THIS DRAWING FOR ORDERING. THE CORRECT PART NUMBER IS SHOWN IN THE PARTS LIST, AND MAY BE SLIGHTLY DIFFERENT OR AMENDED SINCE THIS DRAWING WAS PREPARED.

SECTION 4
EXPLODED VIEWS & PARTS LIST

4-1. EXPLODED VIEWS ❶ CAMERA LENS SECTION

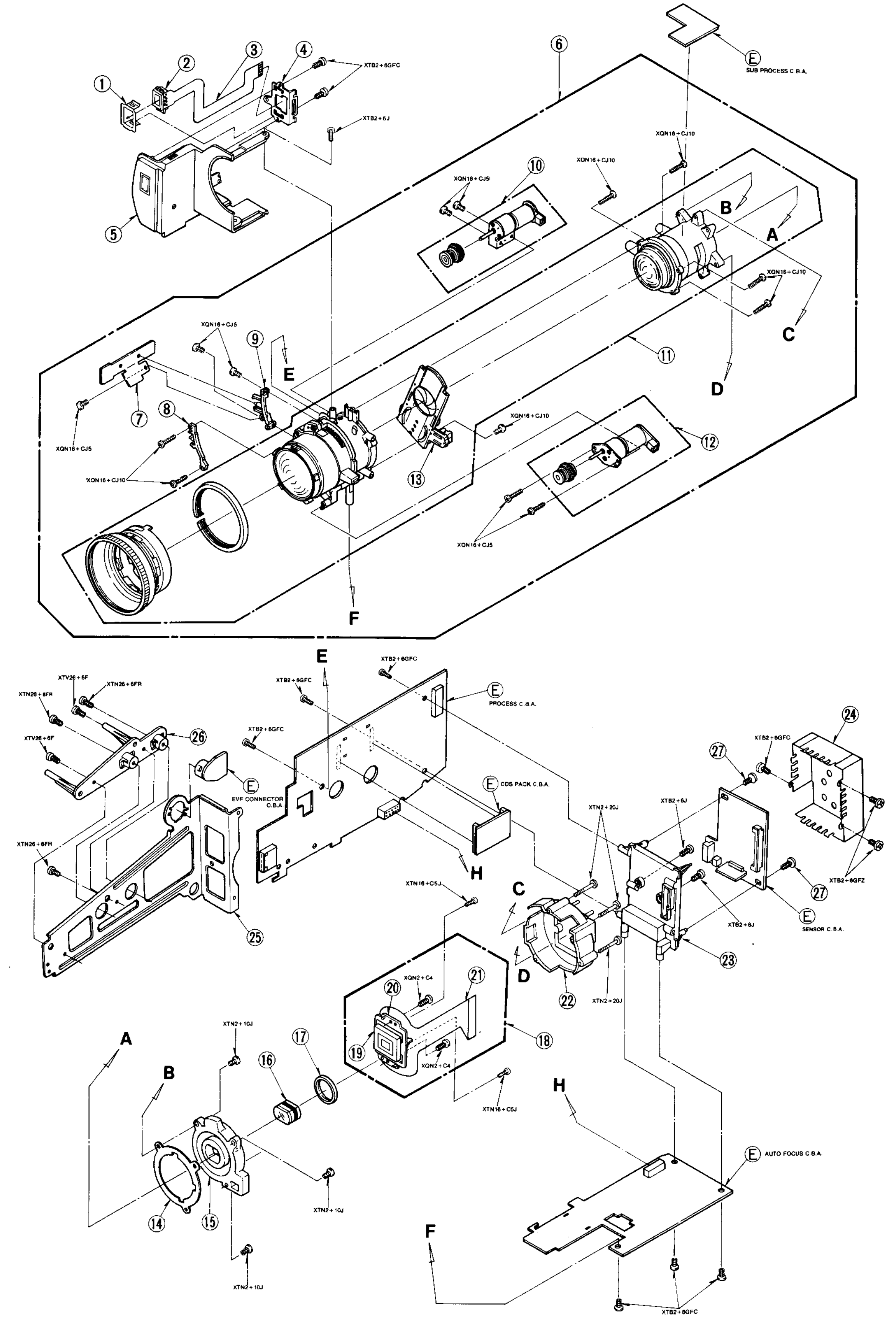

Back Page:
INTERCONNECTION Section

❷ VTR MECHANISM SECTION (1)

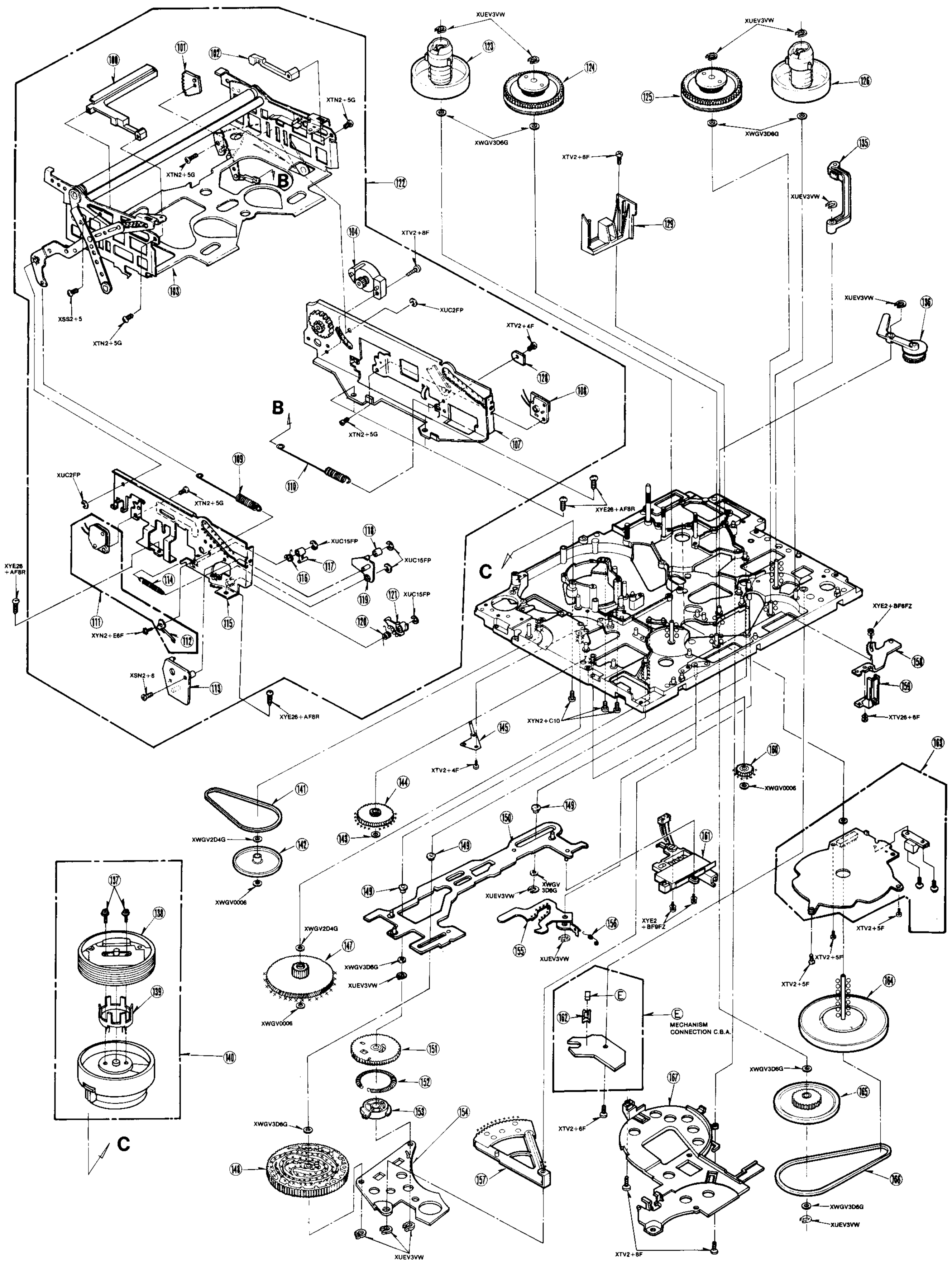

❸ VTR MECHA

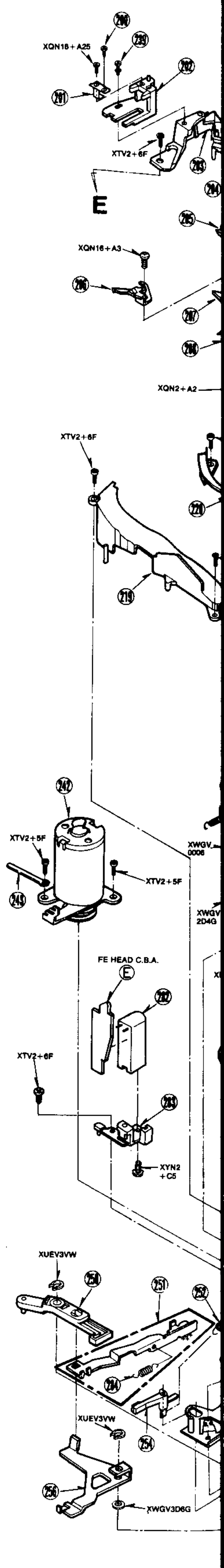

❸ VTR MECHANISM SECTION (2)

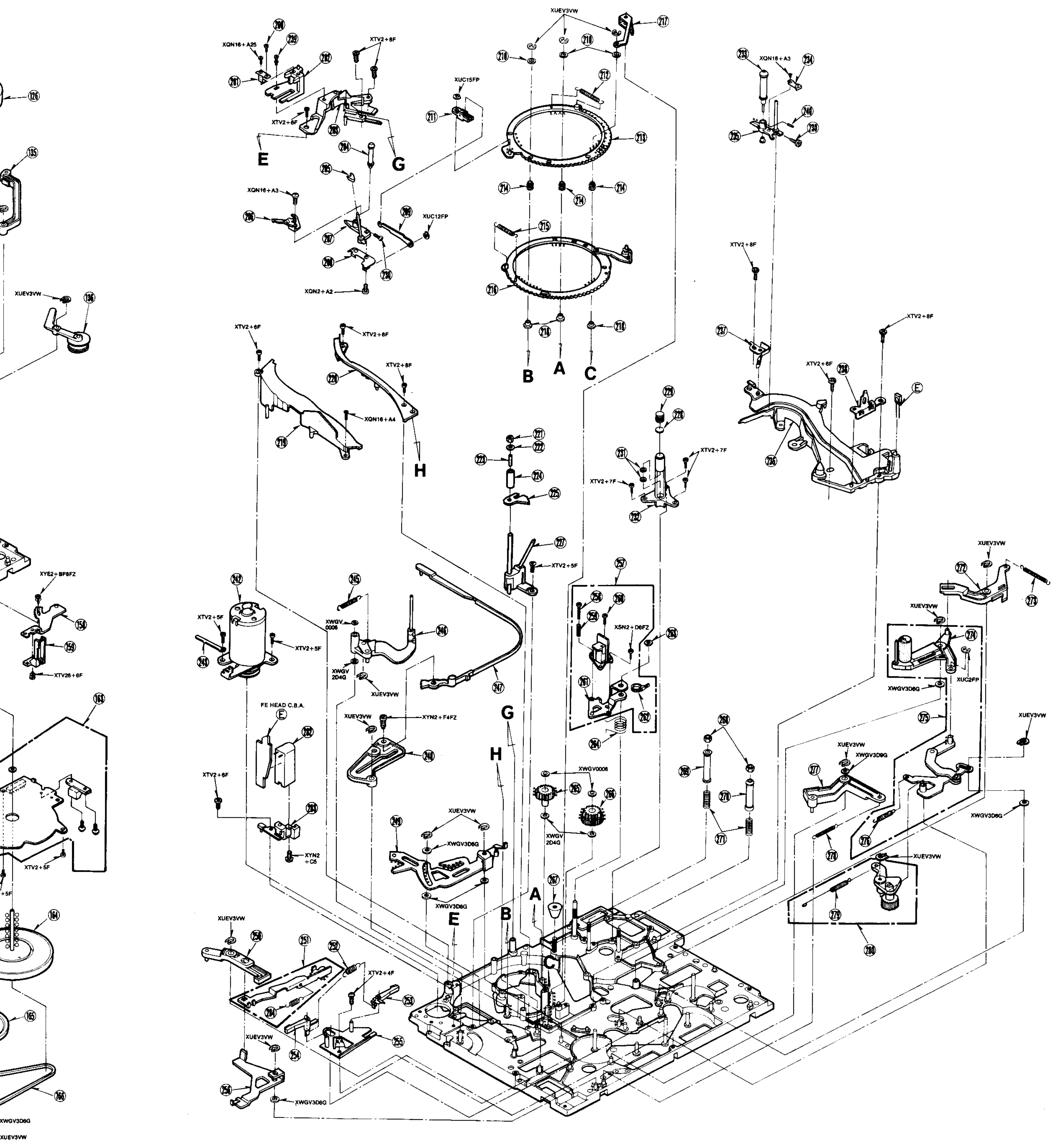

❹ CHASSIS & FRAME SECTION

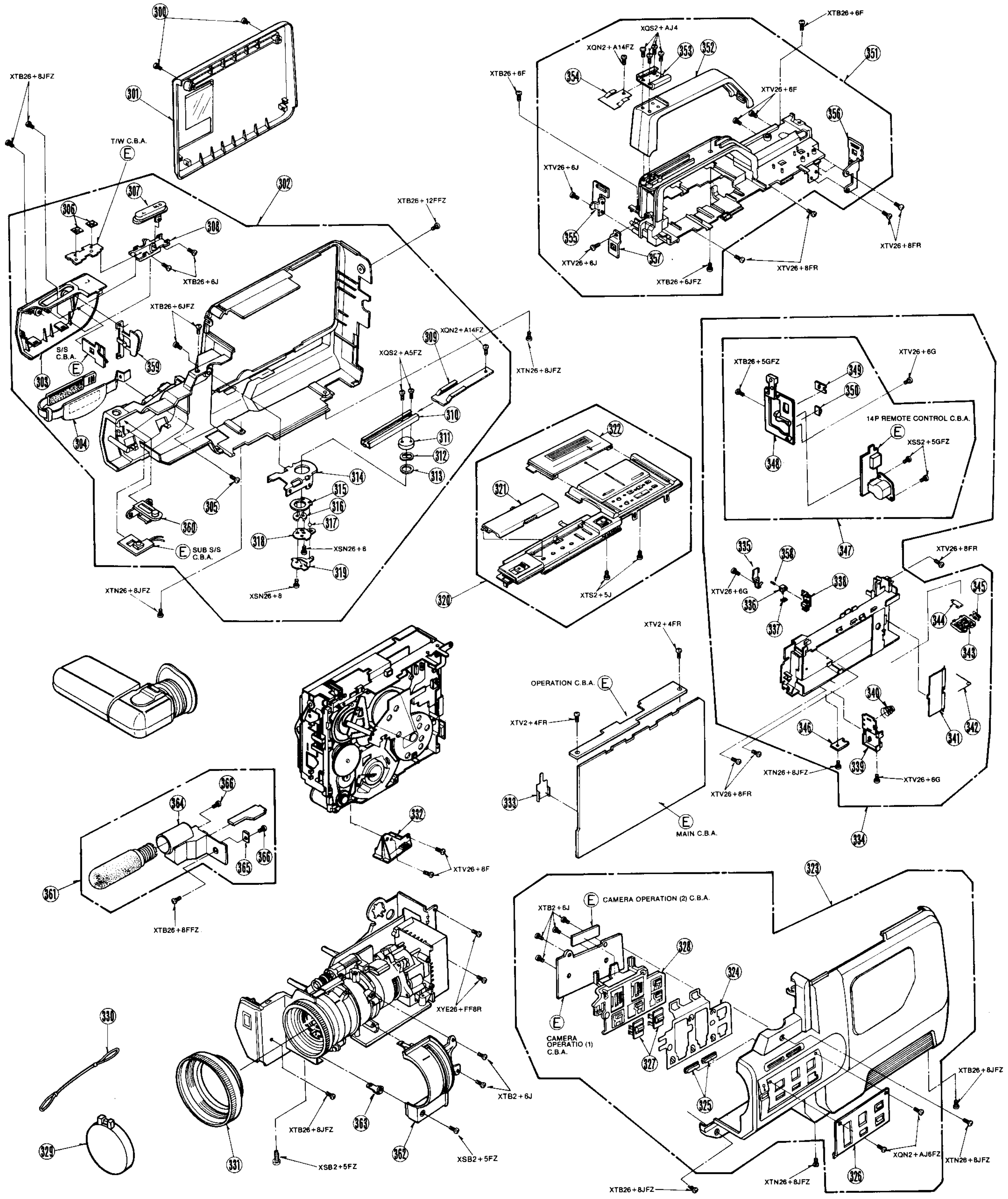

❺ E.V.F. SECTION

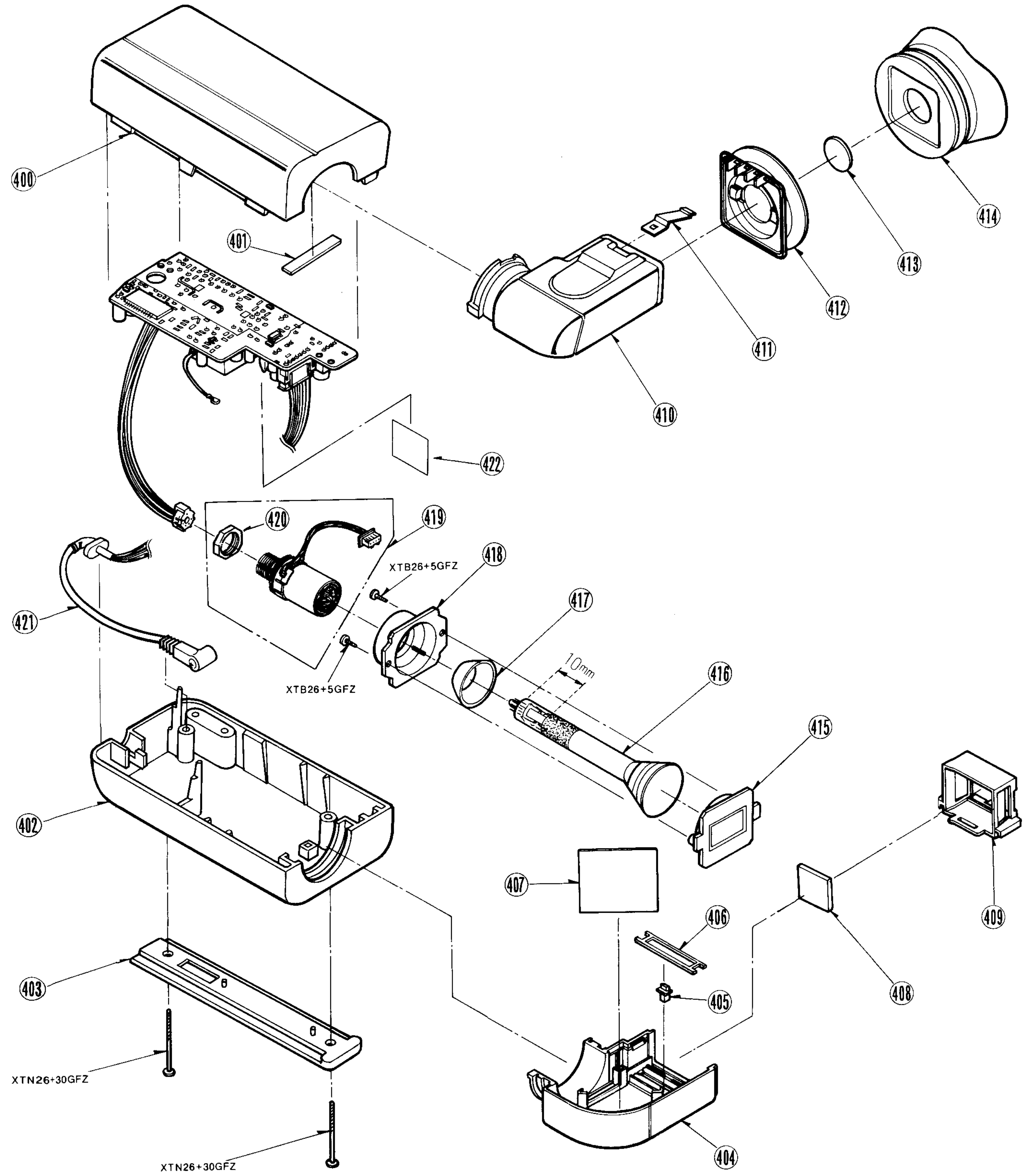

❻ PACKING PARTS & ACCESSORIES SECTION (NV-M7E/B/EO/EM/EA/A)

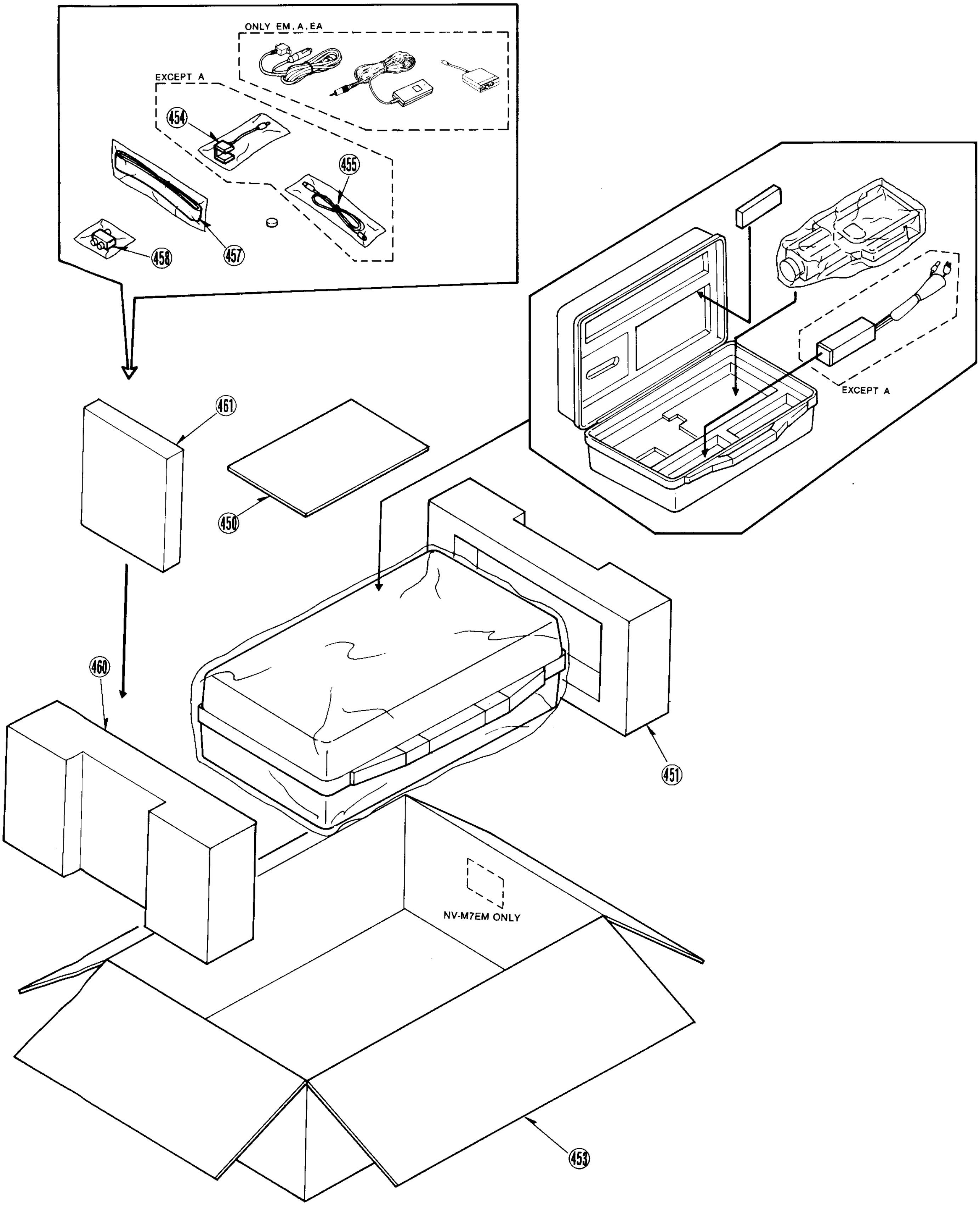

❼ PACKING PARTS & ACCESSORIES SECTION (NV-M7EG/EN)

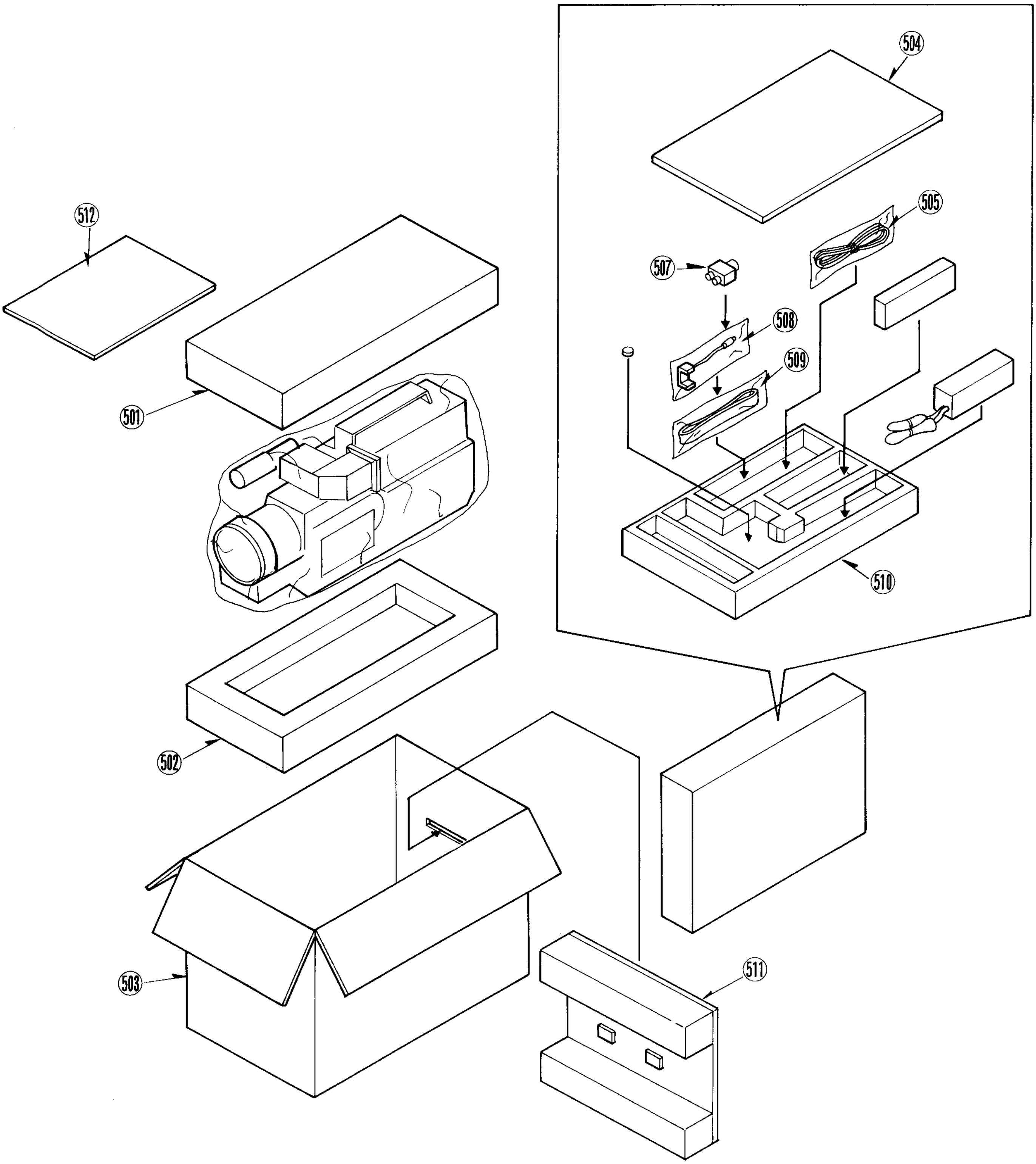

❽ PACKING PARTS & ACCESSORIES SECTION (NV-M7AM)

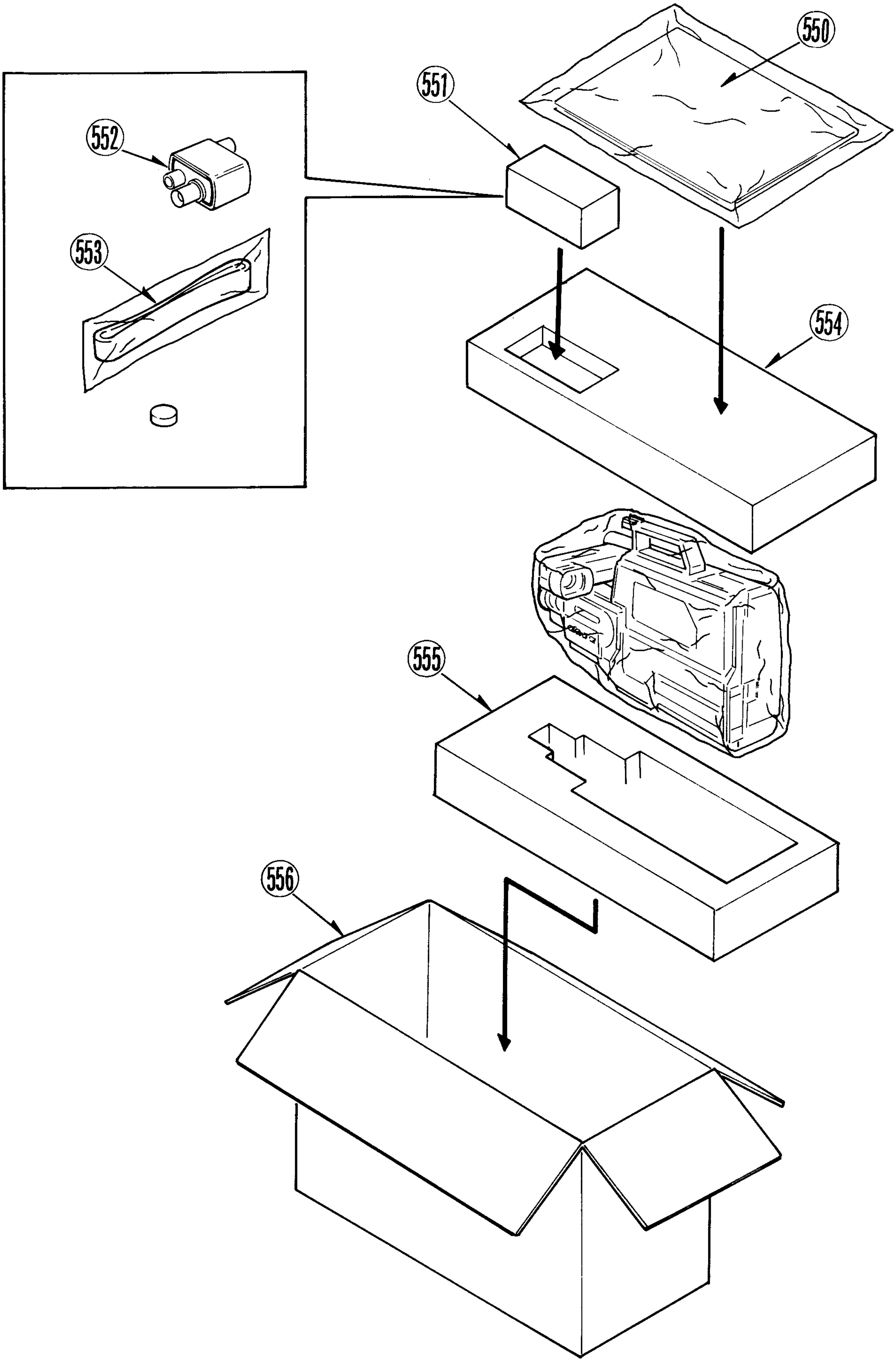

1. CONTROLS AND COMPONENTS

FRONT SIDE

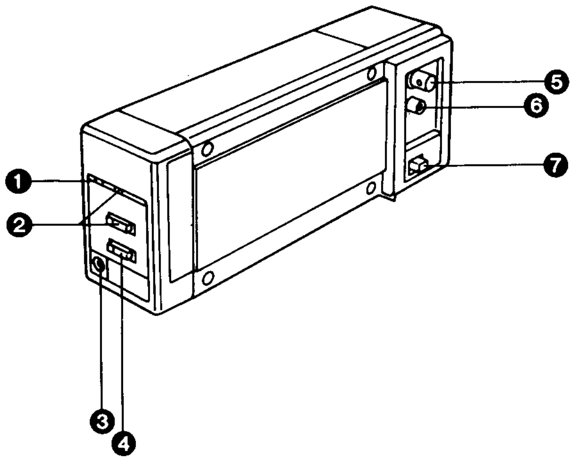

REAR SIDE

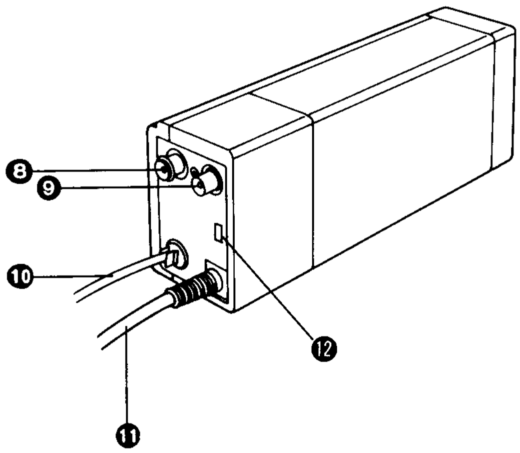

❶ Charging Indicator

❷ Operation Switch with Indicator

❸ Battery Pack Charging Socket

❹ TV/VTR Selector

❺ Video Output Socket

❻ Audio Output Socket

❼ Power On/Off Switch

❽ RF Input Socket

❾ RF Output Socket

❿ Mains Lead

⓫ Adaptor Cable

⓬ CH Select (for EN/A/EA)

2. DISASSEMBLY METHOD

1. Removal of Top Case

Unscrew the 4 screws (A) and remove the Top Case.

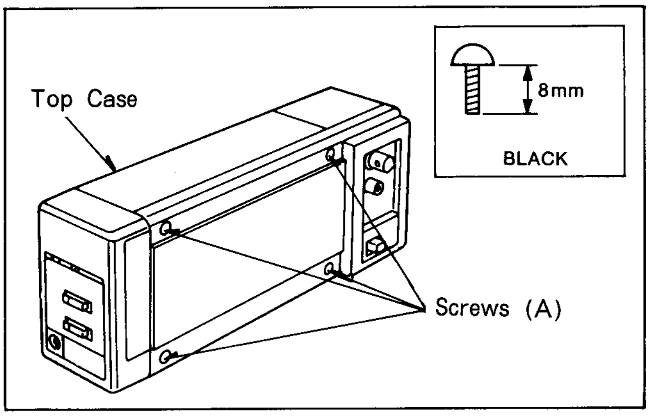

Fig.1

2. Removal of Front Panel

Remove the Front Panel disconnecting the connector P1.

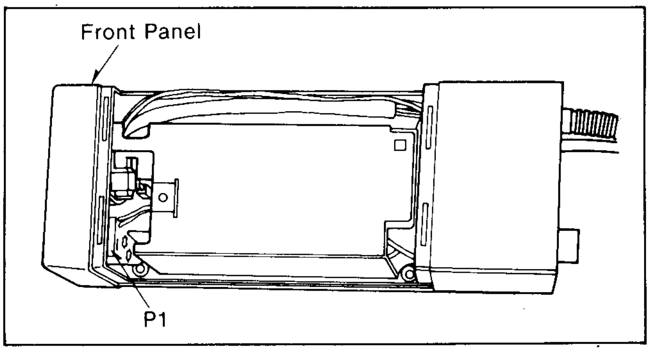

Fig.2

3. Removal of Main Circuit Board

Unscrew the 2 screws (B) and remove the Main Circuit Board.

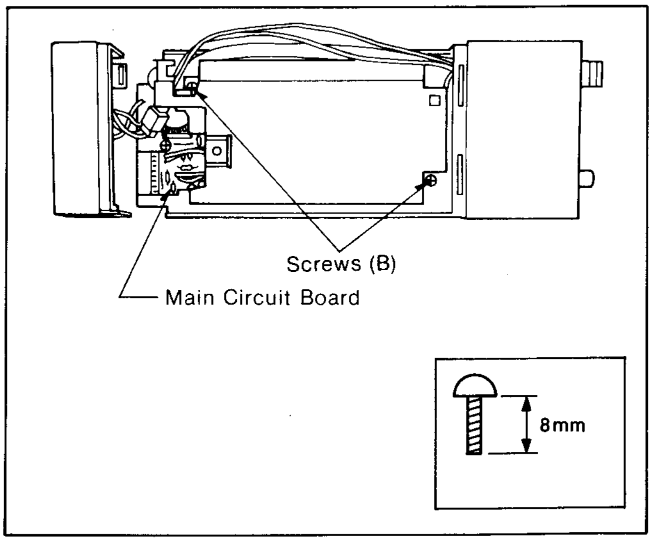

Fig.3

4. Removal of Rear Case

Unscrew the 3 screws (C) remove the Rear Case.

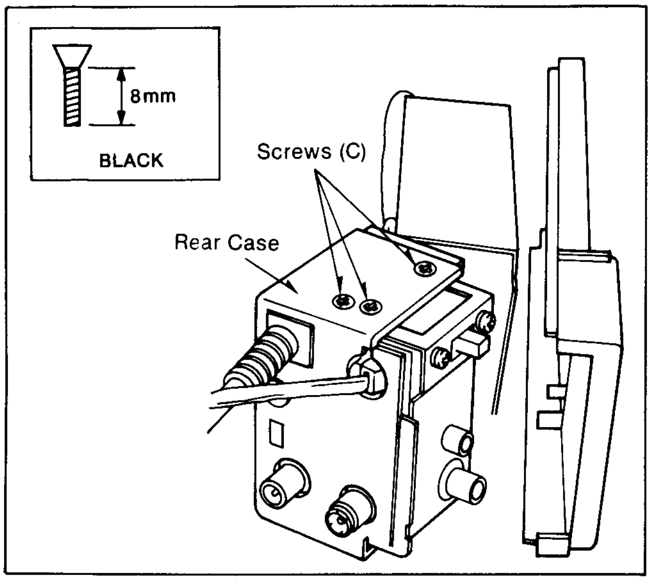

Fig.4

5. Removal of Main Sield Case

Diconnect the connector P6 and connector (E) and remove the Main Shield Case.

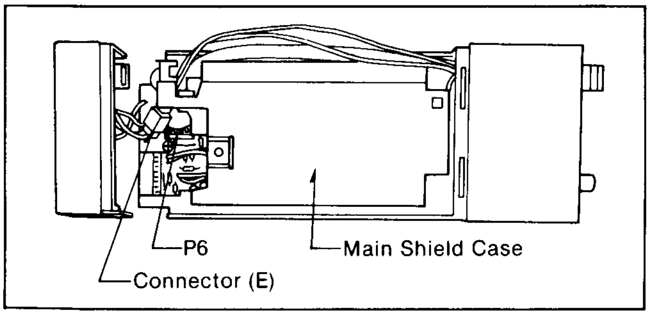

Fig.5

6. Removal of Front Panel Circuit Board

Unscrew the 2 screws (F) and remove the Front Panel Circuit Board.

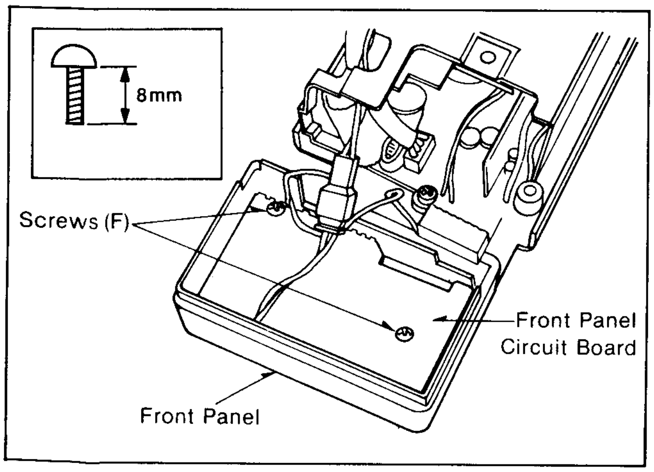

Fig.6

7. Removal of A–V Terminal Circuit Board

Remove shield case and unscrew the 2 screws (G) and remove the A–V Terminal Circuit Board.

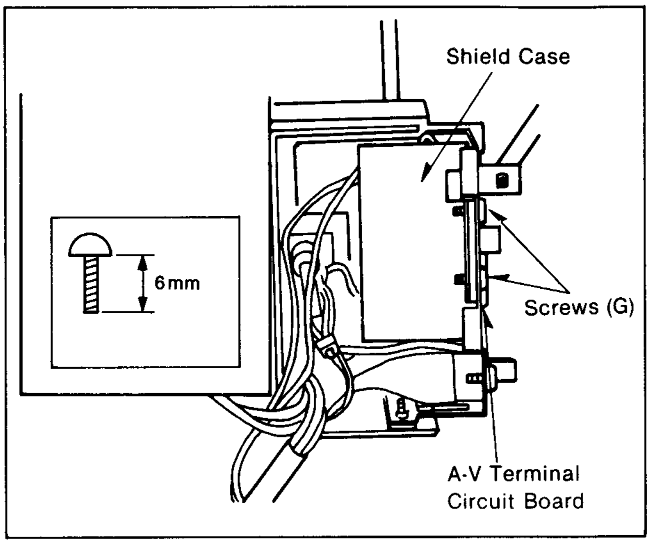

Fig.7

3. ELECTRICAL ADJUSTMENT PROCEDURES

This section provides complete electrical adjustment procedures which may be required for electronic circuit of the AC Adaptor.

3-1. TEST EQUIPMENTS

To perform the electrical adjustments completely following equipments are required.

1. D.V.M. (Digital Volt Meter)
   Voltage Range :0.001～50V
2. Oscilloscope
   Voltage Range :0.005～50V/div
3. DC Ammeter
   Current Range :0～10A
4. DC Voltmeter
   Voltage Range :0～20V
5. Plastic Tip Driver
6. Resistor (5ohm Variable 200W)
7. DC Power Supply (5A/20V)

AC Adaptor

VW-AM7 E/BA B/EA EN/A EM

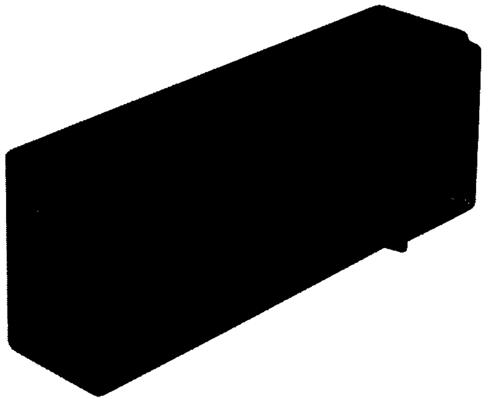

ITEM	SPECIFICATION	ITEM	SPECIFICATION
POWER	SOURCE: 100~240 V AC 50/60 Hz (Automatic Voltage Adjustment)	RF OUT SYSTEM	VHF: CH3/4, 76±3 dBμ, 75Ω unbalanced PAL B (VW-AM7EN/EA) UHF: CH36±4, 70^{+2}_{-3}dBμ, 75Ω unbalanced PAL G (VW-AM7E/EM) VHF: CH0/1, 76±3 dBμ, 75Ω unbalanced PAL B (VW-AM7A) UHF: CH36±4, 73±3 dBμ, 75Ω unbalanced PAL I (VW-AM7B/BA)
	CONSUMPTION: 44 watts		
	OUTPUT: DC 12 V, 1.2 A for VHS Movie DC 20 V, 0.1 A for Heater DC 12 V, 1.5 A for battery charge		
VIDEO	OUTPUT: VIDEO OUT CONNECTOR (BNC) 1.0 Vp-p, 75Ω terminated	DIMENSIONS	63(W)×84(H)×220(D) mm
AUDIO	OUTPUT: AUDIO OUT CONNECTOR (Phone Type) −8 dB, less than 2 kΩ	WEIGHT	0.86 kg

Weight and dimensions shown are approximate.
Specifications are subject to change without notice.

CAUTION: FOR USE WITH VHS VIDEO MOVIE, MODEL NV-M7.

WARNING: TO PREVENT FIRE OR SHOCK HAZARD, DO NOT EXPOSE THIS EQUIPMENT TO RAIN OR MOISTURE.

CONTENTS

1. CONTROLS AND COMPONENTS 1
2. DISASSEMBLY METHOD 1
3. ELECTRICAL ADJUSTMENT PROCEDURES 2
4. AC ADAPTOR BLOCK DIAGRAM 4
5. AC ADAPTOR SCHEMATIC DIAGRAM 6
6. MAIN C.B.A. (VEP61013A), FRONT PANEL C.B.A. (VEP60054A) &
   A-V TERMINAL C.B.A. (VEP60052A) 9
7. RF CONVERTER SCHEMATIC DIAGRAM (VW-AM7E/EM) 10
8. RF CONVERTER C.B.A. (ENC47956: VW-AM7E/EM) 10
9. RF CONVERTER SCHEMATIC DIAGRAM (VW-AM7B/BA) 11
10. RF CONVERTER C.B.A. (ENC47957: VW-AM7B/BA) 11
11. RF CONVERTER SCHEMATIC DIAGRAM (VW-AM7EN/EA) 12
12. RF CONVERTER C.B.A. (ENC47901: VW-AW7EN/EM) 12
13. RF CONVERTER SCHEMATIC DIAGRAM (VW-AM7A) 13
14. RF CONVERTER C.B.A. (ENC47902: VW-AM7A) 13
15. EXPLODED VIEWS 14
    1. CHASSIS & FRAME SECTION 14
    2. PACKING PARTS SECTION (VW-AM7A/BA) 15

PARTS LIST

ORDER NO. VRD8712M156
(Date of issue : DEC, 1987)

MODEL NO : NV-M7E/EG/B/EO/EN/A/EA/EM/AM, VW-AM7E/B/EN/A/EA/EM/BA

1.NV-M7E/EG/B/EO/EN/A/EA/EM/AM

Mechanical Replacement Parts List

※This parts list is detachable from the manual.

Note:1.* Be sure to make your orders of replacement parts according to this list.
2. IMPORTANT SAFETY NOTICE
Components identified with the mark <!> have the special characteristics for safety. When replacing any of these components, use only the same type.

Ref.No.		Part No.	Part Name & Description	Pcs	Remarks
1(1)		VMP1105	AWT SENSOR HOOK	1	
2(1)		VEK3435	AWT SENSOR	1	
3(1)		VWJ0291	AWT FLEXIBLE CABLE	1	
4(1)		VMP1339	AWT SENSOR ANGLE	1	
5(1)		VYK2017	AWT SENSOR CASE UNIT	1	
6(1)		VXW0004	LENS UNIT	1	
7(1)		VEP30038A	ENCODER C.B.	1	
8(1)		VJF0517	ENCODER HOLDER (A)	1	
9(1)		VJF0518	ENCODER HOLDER (B)	1	
10(1)		VEM0286	ZOOM MOTOR	1	
11(1)		VXW0020	LENS ASSEMBLE	1	
12(1)		VEM0285	AUTO FOCUS MOTOR	1	
13(1)		VXL1635	IRIS UNIT	1	
14(1)		VMX1347	ACTUATER FRAME SEAM	1	
15(1)		VXQ0017	ACTUATER UNIT	1	
16(1)		VDL0143	CRYSTAL FILTER	1	
17(1)		VMX1276	CCD CUSHION	1	
18(1)		VEK3395	CCD UNIT	1	
19(1)		MN3745F	CCD	1	
20(1)		VMA7183	CCD PLATE	1	
21(1)		VWJ0288	CCD FLEXIBLE CABLE	1	
22(1)		VMD1136	SENSOR FLAME	1	
23(1)		VMD1137	SENSOR C.B.A. FLAME	1	
24(1)		VXA3121	SENSOR SHIELD CASE UNIT	1	
25(1)		VMP1447	CAMERA ANGLE	1	
26(1)		VGQ1371	CAMERA ANGLE BOSS	1	
27(1)		VHD0398	SENSOR SETTING SCREW	1	
100(2)		VMD0954	CASSETTE GUIDE (L)	1	
101(2)		VDG0426	MAIN ARM GEAR (A)	1	
102(2)		VMD0953	CASSETTE GUIDE (R)	1	
103(2)		VXA3022	CASSETTE HOLDER UNIT	1	
104(2)		VMD1130	DAMPER UNIT	1	
107(2)		VXA3024	STAND (R) UNIT	1	
108(2)		VEK3414	PHOTO HOLDER (R) UNIT	1	
109(2)		VMB1329	HOLDER SPRING (L)	1	
110(2)		VMB1621	HOLDER SPRING (R)	1	
111(2)		VEK3415	PHOTO HOLDER (L) UNIT	1	
112(2)		VSH0026	LEAF SW	1	<R>
113(2)		VMD0952	LEAF SW COVER (O)	1	
114(2)		VMB1330	LOCK BOARD SPRING	1	
115(2)		VXA3023	STAND (L) UNIT	1	
116(2)		VMB1453	LOCK LEVER (B) SPRING	1	
117(2)		VML1650	LOCK LEVER (B)	1	
118(2)		VDP1096	LOCK ROLLER (O)	1	
119(2)		VXL1648	LOCK BOARD UNIT	1	
120(2)		VMB1331	LOCK LEVER (A) SPRING	1	
121(2)		VML1649	LOCK LEVER (A)	1	
122(2)		VXA3119	CASSETTE UP (O) UNIT	1	
123(2)		VXR0128	SUPPLY REEL TABLE	1	
124(2)		VXP0900	SUPPLY CLUTCH UNIT	1	
125(2)		VXP0901	TAKE-UP CLUTCH UNIT	1	
126(2)		VXR0171	TAKE-UP REEL TABLE	1	
128(2)		VSQ0493	DEW SENSOR UNIT	1	
129(2)		VGQ0888	CASSETTE OPENER	1	
135(2)		VXZ0246	SOFT BRAKE (T) UNIT	1	
136(2)		VXP0899	DRIVE GEAR ARM UNIT	1	
137(2)		VHD0288	CYLINDER UNIT SCREW	2	
138(2)		VEH0366	UPPER CYLINDER UNIT	1	<R>
139(2)		VJR0347	RT TERMINAL	1	
140(2)		VEG0568	CYLINDER UNIT	1	<R>
141(2)		VDV0167	LOADING BELT	1	
142(2)		VDG0370	INTERMEDIATE PULLEY GEAR	1	
143(2)		VMX0653	CUT WASHER	1	
144(2)		VDG0372	DRIVE GEAR (B)	1	
145(2)		VXS0076	EARTH HOLDER UNIT	1	
147(2)		VDG0371	DRIVE GEAR (A)	1	
148(2)		VDG0202	CAM GEAR	1	
149(2)		VMX0388	THRUST WASHER	3	
150(2)		VXL1654	MAIN ROD (K) UNIT	1	
151(2)		VDG0211	LOADING GEAR (C)(2)	1	
152(2)		VMB1324	LOADING GEAR (C) SPRING	1	
153(2)		VDG0210	LOADING GEAR (C)(1)	1	
154(2)		VMA7228	GUARD PLATE	1	
155(2)		VML1707	DRIVE ARMKICK LEVER	1	
156(2)		VMB1388	DRIVE ARMKICK LEVER SPRING	1	
157(2)		VXL1706	SECTOR GEAR UNIT	1	
158(2)		VMA6560	SAFETY TAB SW BASE	1	
159(2)		VSH0023	SAFETY TAB SW	1	<R>
160(2)		VDG0207	DRIVE GEAR (C)	1	
161(2)		VSS0193	MODE SELECT SW	1	<R>
162(2)		VMX1280	SENSOR SPACER	1	
163(2)		VEK3398	STATOR UNIT	1	<R>
164(2)		VXP0634	ROTOR UNIT	1	<R>
165(2)		VXP0897	MAIN PULLEY UNIT	1	
166(2)		VDV0155	CAPSTAN BELT	1	<R>
167(2)		VMD0935	BELT COVER	1	
204(3)		VXP0841	SUPPLY ROLLER POST UNIT	1	
200(3)		VHD0282	P2 ADJUST PLATE SCREW	1	
201(3)		VMA6542	P2 ADJUST PLATE	1	
202(3)		VMD0701	SUPPLY POST STOPPER	1	
203(3)		VMD1166	V STOPPER BASE	1	
204(3)		VXP0841	SUPPLY ROLLER POST UNIT	1	
205(3)		VGQ0842	P2 CAP	1	
206(3)		VMD0769	TAPE PROTECTOR	1	
207(3)		VXA3158	SUPPLY SHAFT HOLDER(1)UNIT	1	
208(3)		VXA3159	SUPPLY SHAFT HOLDER ANGLE	1	
			UNIT		
209(3)		VMM0144	CONNECTION ROD	1	
210(3)		VMX1282	RING GUIDE SLEEVE UNIT	3	
211(3)		VXA2231	CONNECTION TIE UNIT	1	
212(3)		VMB1319	LOADING SPRING	1	
213(3)		VXA2253	LOADING RING (S)(1) UNIT	1	
214(3)		VDP1160	RING GUIDE ROLLER	3	
215(3)		VMB1319	LOADING SPRING	1	
216(3)		VXA2223	LOADING RING (T)(1) UNIT	1	
217(3)		VMC0250	PRESSER SPRING	1	
218(3)		VMX1279	RING GUIDE SLEEVE	3	
219(3)		VMD0721	LOADING GUIDE (S)(1)	1	
220(3)		VMD1128	LOADING GUIDE (S)(2)	1	
221(3)		VMX1088	SUPPLY UPPER LIMITER	1	
222(3)		VMS2888	P1 POST SLEEVE (B)	1	
223(3)		VMX0876	P1 COLLAR	1	
224(3)		VDP1033	P1 ROLLER	1	
225(3)		VMA6547	P1 LIMITER PLATE	1	
226(3)		VMB1327	P1 POST SPRING	1	
227(3)		VXA3112	P1 BASE (1) UNIT	1	
228(3)		VXD0098	THRUST SPACER	1	
229(3)		VHD0204	THRUST SCREW NUT	1	
230(3)		VHD0368	ROLLER POST SCREW	2	
231(3)		VMX0775	DUST SEAL	2	
232(3)		VXD0108	CAPSTAN HOUSING UNIT	1	
233(3)		VXJ0036A	ROLLER POST UNIT	1	
234(3)		VMA6546	TAKE-UP SHAFT HOLDER ANGLE	1	
235(3)		VXA3116	TAKE-UP SHAFT HOLDER (A)	1	
			UNIT		
236(3)		VMD1165	TAKE-UP LOADING BASE	1	
237(3)		VMC0352	SHAFT HOLDER PRESSURE	1	
			SPRING		
238(3)		VMA7226	SHAFT HOLDER PLATE ANGLE	1	
239(3)		VHD0403	V STOPPER SCREW	1	
240(3)		VHD0367	TAKE-UP SHAFT ADJ.SCREW	1	
242(3)		VEM0288	LOADING MOTOR UNIT	1	<R>
243(3)		VJF0444	CLAMPER	1	
245(3)		VMB1747	TENSION SPRING	1	
246(3)		VXL1262	TENSION ARM UNIT	1	
247(3)		VXZ0245	TENSION BAND UNIT	1	
248(3)		VML2065	BAND RELEASE ARM	1	
249(3)		VML1631	TENSION KICK LEVER	1	
250(3)		VML2064	EJECT LEVER (A)	1	
251(3)		VXA3020	SUPPORTER UNIT	1	
252(3)		VMB1405	BRAKE SPRING	1	
253(3)		VXZ0207	BRAKE (R) UNIT	1	
254(3)		VXZ0206	BRAKE (L) UNIT	1	
255(3)		VXA2392	BRAKE PLATE (1) UNIT	1	
256(3)		VML2073	EJECT LEVER (B)	1	

To guarantee the FUNCTION, SAFETY and RELIABLITY of repaired units, only use ORIGINAL REPLACEMENT PARTS which are listed with their part numbers in this parts list section.

Ref.No.		Part No.	Part Name & Description	Pcs	Remarks
257(3)		VED0047	A/C HEAD UNIT	1	<R>
258(3)		VHD0275	A/C HEAD ADJUST SCREW	1	
259(3)		VMB1321	A/C HEAD ADJUST SPRING	1	
260(3)		VHD0381	A/C HEAD TILT ADJUST SCREW	1	
261(3)		VXL1696	A/C HEAD ARM UNIT	1	
262(3)		VJF0300	A/C HEAD BINDER	1	
263(3)		VHN0077	A/C HEAD ARM NUT	1	
264(3)		VMB1320	A/C HEAD SPRING	1	
265(3)		VDG0208	LOADING GEAR (A)	1	
266(3)		VDG0461	LOADING GEAR (B)	1	
267(3)		VHN0072	ADJUST NUT	1	
268(3)		VHN0047	M2 NYLON NUT	2	
269(3)		VMS2693	P4 POST SLEEVE	1	
270(3)		VXJ0057	P5 POST SLEEVE	1	
271(3)		VMB1322	P4,P5 SPRING	2	
272(3)		VML2067	PINCH LEVER	1	
273(3)		VMB1748	PINCH LEVER SPRING	1	
274(3)		VXL1652	PINCH ROLLER ARM(1)UNIT	1	
275(3)		VXL1650	PINCH ARM UNIT	1	
276(3)		VMB1326	PINCH ARM SPRING	1	
277(3)		VXL1264	SOFT BRAKE LEVER (S) UNIT	1	
278(3)		VMB1314	SOFT BRAKE SPRING (S)	1	
279(3)		VMB1771	REW ARM SPRING	1	
280(3)		VXL1649	FF/REW ARM UNIT	1	
282(3)		VBS0021	FE HEAD	1	<R>
283(3)		VMD1129	FE HEAD BASE	1	
284(3)		VMB1447	SUPPORTER SPRING	1	
300(4)		VHD0371	CASSETTE COVER SCREW	2	
301(4)		VYP2055	CASSETTE COVER UNIT	1	NV-M7 E,B,EG,EO,A,EA
301(4)		VYP2056	CASSETTE COVER UNIT	1	NV-M7 EN,EM,AM
302(4)		VYK1783	SIDE CASE (L) UNIT	1	NV-M7 E,B,EG,EO,A,EA
302(4)		VYK1906	SIDE CASE (L) UNIT	1	NV-M7 EN,EM,AM
303(4)		VKM1159	GRIP CASE	1	
304(4)		VYC0215	GRIP BELT UNIT	1	NV-M7 E,B,EG,EO,EM,A,
					EA
304(4)		VYC0232	GRIP BELT UNIT	1	NV-M7 EN,AM
305(4)		VHD0386	GRIP BELT SCREW	1	
306(4)		VMG0358	SWITCH RUBBER PIECE	2	
307(4)		VGU4001	ZOOM BUTTON	1	
308(4)		VGQ1366	ZOOM BUTTON PIECE	1	
309(4)		VMC0257	EVF SHOE SPRING	1	
310(4)		VMP1073	EVF SHOE	1	
311(4)		VMP1072	EVF ROTATION STAND	1	
312(4)		WW-12	WAVING WASHER	1	
313(4)		VMX1123	EVF ROTATION SPACER	1	
314(4)		VMP1341	EVF ANGLE	1	
315(4)		VGQ1213	EVF ROTATION PIECE (A)	1	
316(4)		VGQ1214	EVF ROTATION PIECE (B)	1	
317(4)		VDB0876	EVF CLICK BALL	1	
318(4)		VMC0277	EVF CLICK SPRING (A)	1	
319(4)		VMC0278	EVF CLICK SPRING (B)	1	
320(4)		VXU0786	OPERATION PANEL UNIT	1	NV-M7 E,B,EG,EA
320(4)		VXU0800	OPERATION PANEL UNIT	1	NV-M7 EO,EN,EM,AM,A
321(4)		VKF0982	RESET LID	1	
322(4)		VKF0983	CURSOR	1	NV-M7 E,B,EG,EA
322(4)		VKF0994	CURSOR	1	NV-M7 EO,EN,EM,AM,A
323(4)		VYK1777	SIDE CASE (R) UNIT	1	NV-M7 E,B,EG,EO,A,EA
323(4)		VYK1778	SIDE CASE (R) UNIT	1	NV-M EN,EM,AM
324(4)		VMC0351	CAMERA OPERATION SWITCH	1	
			SPRING		
325(4)		VGU4008	BACKLIGHT KNOB	2	
326(4)		VGP1783	CAMERA OPERATION PLATE	1	
327(4)		VGU4002	SLIDE KNOB	2	
328(4)		VGP1756	CAMERA OPERATION PANEL	1	
329(4)		VKF0981	HOOD CAP	1	
330(4)		VGQ1350	HOOD STRAP	1	
331(4)		VDW0084	LENS HOOD		
332(4)		VYQ0096	TRIPOD FIXING BRACKET UNIT	1	
333(4)		VSC2179	SHIELD CASE (LID)	1	
334(4)		VYK1965	BATTERY CASE UNIT	1	NV-M7 E,B,EG
334(4)		VYK1787	BATTERY CASE UNIT	1	NV-M7 EO,EN,EA,EM,AM,
					A

Ref.No.		Part No.	Part Name & Description	Pcs	Remarks
335(4)		VMC0238	BATTERY STOPPER FIXING	1	
			ANGLE		
336(4)		VGQ1122	BATTERY STOPPER	1	
337(4)		VGQ1181	BATTERY STOPPER PIECE	1	
338(4)		VGU3906	BATTERY EJECT BUTTON	1	
339(4)		VGQ1129	BATTERY CATCHER	1	
340(4)		VMB1614	BATTERY STOPPER SPRING	1	
341(4)		VKF0831	BATTERY DOOR	1	
342(4)		VMC0237	BATTERY DOOR SPRING	1	
343(4)		VJF0539	BATTERY FIXING PIECE	1	
344(4)		VJR0326	ELECTRODE (+)	1	
345(4)		VMC0363	ELECTRODE (-)	1	
346(4)		VKF0960	BATTERY LID	1	
347(4)		VEJ0631	JACK PLATE UNIT	1	NV-M7 E,B,EG
347(4)		VEJ0610	JACK PLATE UNIT	1	NV-M7 EO,EN,EA,EM,AM
					A
348(4)		VKM1092	JACK PLATE CASE	1	
349(4)		VGH1382	JACK NAME PLATE	1	
350(4)		VGU3902	EDIT KNOB	1	
351(4)		VXK0860	TOP FRAME UNIT	1	
352(4)		VKM1161	HANDLE TOP CASE	1	
353(4)		VMP1079	SHOE	1	
354(4)		VMC0241	SHOE SPRING	1	
355(4)		VMP1446	SHOULDER BELT ANGE(FRONT)	1	
356(4)		VMP1503	SHOULDER BELT ANGLE(REAR)	1	
357(4)		VMP1462	MIC MOUNT ANGLE	1	
358(4)		VMB1610	BATTERY EJECT SPRING	1	
359(4)		VGU4055	START/STOP BUTTON	1	
360(4)		VGU4056	SUB START/STOP BUTTON	1	
361(4)		VEK3503	MIC UNIT	1	
362(4)		VKM1160	LENS COVER	1	
363(4)		VMP1395	LENS COVER ANGLE	1	
364(4)		VGQ1515	MICROPHONE HOUSING	1	
365(4)		VMP1696	CLAMPER	1	
366(4)		VHD0417	SCREW	2	
400(5)		VKM1144	EVF TOP COVER	1	NV-M7 E,B,EG,EO,A,EA
400(5)		VKM1257	EVF TOP COVER	1	NV-M7 EN,EM,AM
401(5)		VMC0317	EVF ROTATION SPRING	1	
402(5)		VKM1145	EVF BOTTOM COVER	1	
403(5)		VGQ1363	EVF FOOD	1	
404(5)		VKM1147	CRT BOTTOM CASE	1	
405(5)		VGU3895	EYESIGHT CORRECTION KNOB	1	
406(5)		VJF0502	KNOB PRESSURE SHEET	1	
407(5)		VDL0147	MIRROR	1	
408(5)		VDL0139	EYESIGHT CORRECTION LENS	1	
409(5)		VKF0947	LENS HOLDER	1	
410(5)		VKM1146	CRT TOP CASE	1	
411(5)		VMC0316	EYE CAP HOLDER SPRING	1	
412(5)		VKF0978	EYE CAP HOLDER	1	
413(5)		VDL0140	EYE CAP LENS	1	
414(5)		VDG0407	EYE CAP	1	
415(5)		VJF0526	CRT MASKING	1	
416(5)		M01JVV47WB	CRT	1	
417(5)		VMX1004	CRT PROTECTOR RUBBER	1	
418(5)		VJF0527	CRT HOLDER	1	
419(5)		ELY07V552A	DEFLECTION YOKE	1	
420(5)		VHN0093	HOLDER RING	1	
421(5)		VEK3387	EVF CABLE UNIT	1	
422(5)		VMZ1187	BARRIER	1	
450(6)		VQT2453	OPERATING INSTRUCTIONS	1	NV-M7 E/B (ENGLISH/
					GERMAN/FRENCH)
450(6)		VQT2461	OPERATING INSTRUCTIONS	1	NV-M7 E(DENISH/DATCH)
450(6)		VQT2458	OPERATING INSTRUCTIONS	1	NV-M7 EO (ENGLISH/
					GERMAN/FRENCH)
450(6)		VQT2459	OPERATING INSTRUCTIONS	1	NV-M7 EO (FINNISH/
					SWEDISH)
450(6)		VQT2460	OPERATING INSTRUCTIONS	1	NV-M7 EO (ITALY/
					SPANISH)
450(6)		VQT2456	OPERATING INSTRUCTIONS	1	NV-M7 EA (ENGLISH)
450(6)		VQT2462	OPERATING INSTRUCTIONS	1	NV-M7 EM (HINDUSTANI
					/URDU)
450(6)		VQT2463	OPERATING INSTRUCTIONS	1	NV-M7 EM (ENGLISH/
					ARABIC)
450(6)		VQT2455	OPERATING INSTRUCTIONS	1	NV-M7 A (ENGLISH)
451(6)		VPN2007	CUSHION (R)	1	NV-M7 E,B,EO,EA,A

To guarantee the FUNCTION,SAFETY and RELIABLITY of repaired units,only use ORIGINAL REPLACEMENT PARTS which are listed with their part numbers in this parts list section.

Ref.No.		Part No.	Part Name & Description	Pcs	Remarks
451(6)		VYQ0115	CUSHION (R) UNIT	1	NV-M7EM
453(6)		VPG3675	PACKING CASE	1	NV-M7 E
453(6)		VPG3676	PACKING CASE	1	NV-M7 B
453(6)		VPG3678	PACKING CASE	1	NV-M7 EO
453(6)		VPG3679	PACKING CASE	1	NV-M7 A
453(6)		VPG3681	PACKING CASE	1	NV-M7 EA
453(6)		VPG3682	PACKING CASE	1	NV-M7 EM
454(6)		VJA0180	RECHARGEABLE BATTERY	1	NV-M7 E,B,EO,EA,EM
			CATCHER		
455(6)		VJA0321	DIN CABLE	1	NV-M7 E,B,EO,EA,EM
457(6)		VFC0130	SHOULDER STRAP	1	NV-M7 E,B,EO,A,EA
457(6)		VFC0131	SHOULDER STRAP	1	NV-M7 EM
458(6)		VSQ0541	AV OUTPUT ADAPTOR	1	NV-M7 E,B,EO
458(6)		VSQ0495	AV OUTPUT ADAPTOR	1	NV-M7 A,EA,EM
460(6)		VPN2059	CUSHION (L)	1	NV-M7 E,B,EO,EA,EM,A
461(6)		VPK0801	ACCESSORY CASE	1	NV-M7 EA
461(6)		VPK0802	ACCESSORY CASE	1	NV-M7 E,EO
461(6)		VPK0803	ACCESSORY CASE	1	NV-M7 EM
461(6)		VPK0804	ACCESSORY CASE	1	NV-M7 A
461(6)		VPK0816	ACCESSORY CASE	1	NV-M7 B
501(7)		VPN2005	CUSHION (TOP)	1	NV-M7 EG,EN
502(7)		VPN2006	CUSHION (BOTTOM)	1	NV-M7 EG,EN
503(7)		VPG3677	PACKING CASE	1	NV-M7 EG
503(7)		VPG3680	PACKING CASE	1	NV-M7 EN
504(7)		VPN2008	ACCESSORY CUSHION (TOP)	1	NV-M7 EG,EN
505(7)		VJA0321	DIN CABLE	1	NV-M7 EG,EN
507(7)		VSQ0541	AV OUTPUT ADAPTOR	1	NV-M7 EG
507(7)		VSQ0495	AV OUTPUT ADAPTOR	1	NV-M7 EN
508(7)		VJA0180	RECHARGEABLE BATTERY	1	NV-M7 EG,EN
			CATCHER		
509(7)		VFC0130	SHOULDER STRAP	1	NV-M7 EG
509(7)		VFC0131	SHOULDER STRAP	1	NV-M7 EN
510(7)		VPN2009	ACCESSORY CUSHION (BOTTOM)	1	NV-M7 EG,EN
511(7)		VPN2021	HANDLE REINFORCEMENT PAD	1	NV-M7 EG,EN
512(7)		VQT2453	OPERATION INSTRUCTIONS	1	NV-M7 EG (ENGLISH/
					/GERMAN/FRENCH)
512(7)		VQT2454	OPERATING INSTRUCTIONS	1	NV-M7 EN (ENGLISH
					/CHINESE)
550(8)		VQT2457	OPERATING INSTRUCTIONS	1	NV-M7 AM (ENGLISH/
					PEKINGESE/TAIWANES)
551(8)		VPK0773	ACCESSORY CASE	1	NV-M7 AM
552(8)		VSQ0495	AV OUTPUT ADAPTOR	1	NV-M7 AM
553(8)		VFC0131	SHOULDER STRAP	1	NV-M7 AM
554(8)		VPN2005	CUSHION (TOP)	1	NV-M7 AM
555(8)		VPN2006	CUSHION (BOTTOM)	1	NV-M7 AM
556(8)		VPG3683	PACKING CASE	1	NV-M7 AM
			FIXTURES & TOOLS		
		VFK0430	FLEXIBLE EXTENSION CABLE	1	
		VFK0380	EXTENTION CABLE	1	
		VFKS0060	EXTENTION CABLE	1	
		VFK0432	HOLDER SPACER (2PCS)	1	
		VFK0431	CAMERA HOLDER ARM	1	
		VFK0382	CAMERA HOLDER	1	
		VFJ8125H3F	VHS-ALIGNMENT TAPE(PAL)	1	
		VFK0144	RETAINING RING REMOVER	1	
			(3mm)		
		VFK0191	POST ADJUSTMENT PLATE	1	
		VFK0190	REEL TABLE HEIGHT GAUGE	1	
		VFK0189	H-POSITION ADJ.-FIXTURE	1	
		VFK0137	POST ADJUSTMENT SCREWDRIVER	1	
		VFK66	FAN TYPE TENSION GAUGE	1	
		VFK0326	HEX WRENCH SET	1	

Ref.No.		Part No.	Part Name & Description	Pcs	Remarks
		VFK0343	CHECK LIGHT	1	
		VFK27	HEAD CLEANING STICK	1	
		MOR265	MORLYTONE GREASE	1	
		VFK0283	SERVICE ALIGNMENT TOOL KIT	1	
		VFK0136	FINE ADJUSTMENT SCREWDRIVER	1	
		VFK0134	ADAPTOR FOR VFK0133	1	
		VFK0133	DIAL TORQUE GAUGE	1	

To guarantee the FUNCTION,SAFETY and RELIABLITY of repaired units,only use ORIGINAL REPLACEMENT PARTS which are listed with their part numbers in this parts list section.

2.NV-M7E/EG/B/EO/EN/A/EA/EM/AM Electrical Replacement Parts List

Note:1.* Be sure to make your orders of replacement parts according to this list.
2.IMPORTANT SAFETY NOTICE
Components identified with the mark <!> have the special characteristics for safety. When replacing any of these components,use only the same type.
3.Unless otherwise specified,
All resistors are in OHMS ,K=1,000 OHMS. All capacitors are in MICRO-FARADS(uf),P=uuF.
4.The P.C.Board units marked width'■'show below the main assembled parts.
5.Printed circuit board assembly with mark(NLA) is no longer available after discontinuation of the product.

Ref.No.		Part No.	Part Name & Description	Pcs	Remarks
			CAMERA SECTION		
		VEP23063B	PROCESS C.B.A.	1	
		VEP23068C	SUB PROCESS C.B.A.	1	
		VEP28015E	AUTO FOCUS C.B.A.	1	
		VEP22074A	CDS PACK C.B.A.	1	
		VEP23061B	ENCODER PACK C.B.A.	1	
		VEP22073C	SENSOR C.B.A.	1	
			E.V.F SECTION		
		VEP27033B	E.V.F C.B.A.	1	
			VTR SECTION		
		VEP03482A	MAIN C.B.A.	1	
		VEP06452A	OPERATION C.B.A.	1	
		VEP00K79A	CAMERA OPERATION(I) C.B.A.	1	
		VEK3522	CAMERA OPERATION(I) C.B.A.	1	
		VES0413	MECHANISM CONNECTION C.B.A.	1	
		VEK3415	SUPPLY PHOTO C.B.A.	1	
		VEK3414	TAKE UP PHOTO C.B.A.	1	
		VEK3622	ZOOM SWITCH C.B.A	1	
		VEK3623	START/STOP SWITCH C.B.A.	1	
		VEK3624	SUB START/STOP SW C.B.A.	1	
		VEP00H73B	FE HEAD C.B.A.	1	
		VEK3521	E.V.F CONNECTOR C.B.A.	1	
		VEK3621	14P REMOTE CONTROL C.B.A.	1	NV-M7E/EG/B
		VEK3413	14P REMOTE CONTROL C.B.A.	1	NV-M7EO/EN/EM/EA/A/AM
	■	VEP23063B	PROCESS C.B.A.		
B301		VJS2227	CONNECTOR	1	
B302		VJS1948	CONNECTOR	1	

Ref.No.		Part No.	Part Name & Description	Pcs	Remarks
			CAPACITORS		
C101		ECEA0JKS470	E.CAPACITOR 6.3V 47U	1	
C102		ECEA0JKS470	E.CAPACITOR 6.3V 47U	1	
C103		ECEA0JKS470	E.CAPACITOR 6.3V 47U	1	
C104		ECUX1E473FN	CHIP 25V 0.047U	1	
C105		ECUX1E473FN	CHIP 25V 0.047U	1	
C106		ECUX1E473FN	CHIP 25V 0.047U	1	
C107		ECUM1C224ZFN	CHIP 16V 0.22U	1	
C108		ECUM1C224ZFN	CHIP 16V 0.22U	1	
C109		ECST1CY105Z	T.CAPACITOR 16V 1U	1	
C110		ECEA0JKS330I	E.CAPACITOR 6.3V 33U	1	
C111		ECUM1E103ZFM	CHIP 25V 0.01U	1	
C112		ECST1CY105Z	T.CAPACITOR 16V 1U	1	
C113		ECUM1E104ZFN	CHIP 25V 0.1U	1	
C114		ECUM1E104ZFN	CHIP 25V 0.1U	1	
C115		ECUM1H821KBV	CHIP 50V 820P	1	
C116		ECUM1H821KBV	CHIP 50V 820P	1	
C117		ECUM1H821KBV	CHIP 50V 820P	1	
C118		ECEA1AKK100	E.CAPACITOR 10V 10U	1	
C119		ECEA1ASN100	E.CAPACITOR 10V 10U	1	
C120		ECEA1ASN100	E.CAPACITOR 10V 10U	1	
C124		ECST1CY105Z	T.CAPACITOR 16V 1U	1	
C301		ECUM1E104ZFN	CHIP 25V 0.1U	1	
C302		ECUM1E105JCM	CHIP 25V 1U	1	
C303		ECSF1CE105	TANTALUM 16V 1U	1	
C304		ECEA1CKS100	E.CAPACITOR 16V 10U	1	
C305		ECEA1ESN4R7	E.CAPACITOR 25V 4.7U	1	
C306		ECEA1AKK100	E.CAPACITOR 10V 10U	1	
C307		ECEA1VSN2R2	E.CAPACITOR 35V 2.2U	1	
C308		ECUM1E102KBM	CHIP 25V 1000P	1	
C309		ECSF1CE106	TANTALUM 16V 10U	1	
C310		ECUM1E104ZFN	CHIP 25V 0.1U	1	
C311		ECUM1E104ZFN	CHIP 25V 0.1U	1	
C312		ECUM1H560KBM	CHIP 50V 56P	1	
C313		ECUM1C224ZFN	CHIP 16V 0.22U	1	
C314		ECUM1E103ZFM	CHIP 25V 0.01U	1	
C315		ECUM1C224ZFN	CHIP 16V 0.22U	1	
C316		ECEA1CKK100	E.CAPACITOR 16V 10U	1	
C319		ECUM1E473FN	CHIP 25V 0.047U	1	
C320		ECUM1E473FN	CHIP 25V 0.047U	1	
C321		ECUM1E103ZFM	CHIP 25V 0.01U	1	
C322		ECUM1E103ZFM	CHIP 25V 0.01U	1	
C323		ECUM1E473FN	CHIP 25V 0.047U	1	
C324		ECUM1E473FN	CHIP 25V 0.047U	1	
C325		ECUM1E103ZFM	CHIP 25V 0.01U	1	
C326		ECUM1C224ZFN	CHIP 16V 0.22U	1	
C327		ECUM1E104ZFN	CHIP 25V 0.1U	1	
C328		ECUM1E473FN	CHIP 25V 0.047U	1	
C329		ECSF1AE226	T.CAPACITOR 10V 22U	1	
C330		ECSF0JE476	TANTALUM 6.3V 47U	1	
C331		ECUM1C224ZFN	CHIP 16V 0.22U	1	
C335		ECUM1E104ZFN	CHIP 25V 0.1U	1	
C336		ECUM1E104ZFN	CHIP 25V 0.1U	1	
C337		ECUM1E104ZFN	CHIP 25V 0.1U	1	
C338		ECUM1E104ZFN	CHIP 25V 0.1U	1	
C340		ECEA1CKS100	E.CAPACITOR 16V 10U	1	
C341		ECEA1EKS100I	E.CAPACITOR 25V 10U	1	
C342		ECSF1AE476	TANTALUM 10V 47U	1	
C344		ECSF1AE106	TANTALUM 10V 10U	1	
C345		ECST1CY105Z	T.CAPACITOR 16V 1U	1	
C346		ECUM1E331KBM	CHIP 25V 330P	1	
C347		ECEA1EU101	E.CAPACITOR 25V 100U	1	
C351		ECSF1AE106	TANTALUM 10V 10U	1	
C352		ECUM1E105JCM	CHIP 25V 1U	1	
C353		ECSF1AE106	TANTALUM 10V 10U	1	
C354		ECSF1CE106	TANTALUM 16V 10U	1	
C355		ECST1AY225Z	T.CAPACITOR 10V 2.2U	1	
C356		ECST1AY225Z	T.CAPACITOR 10V 2.2U	1	
C357		ECUM1E104ZFN	CHIP 25V 0.1U	1	
C358		ECUM1E104ZFN	CHIP 25V 0.1U	1	
C359		ECUM1E104ZFN	CHIP 25V 0.1U	1	
C360		ECEA0JKS470	E.CAPACITOR 6.3V 47U	1	
C361		ECUM1E104ZFN	CHIP 25V 0.1U	1	

To guarantee the FUNCTION,SAFETY and RELIABLITY of repaired units,only use ORIGINAL REPLACEMENT PARTS which are listed with their part numbers in this parts list section.

Ref.No.		Part No.	Part Name & Description	Pcs	Remarks
C362		ECUM1E101JCM	CHIP 25V 100P	1	
C363		ECUM1H151JCV	CHIP 50V 150P	1	
C371		ECUM1E103ZFM	CHIP 25V 0.01U	1	
C372		ECUM1E103ZFM	CHIP 25V 0.01U	1	
C376		ECSF1AE685	T.CAPACITOR 10V 6.8U	1	
C377		ECSF1AE685	T.CAPACITOR 10V 6.8U	1	
C378		ECUM1E101JCM	CHIP 25V 100P	1	
C379		ECUM1E101JCM	CHIP 25V 100P	1	
C381		ECUM1E101JCM	CHIP 25V 100P	1	
C382		ECUM1E101JCM	CHIP 25V 100P	1	
C383		ECUM1E101JCM	CHIP 25V 100P	1	
C384		ECUM1E104ZFN	CHIP 25V 0.1U	1	
			DIODES		
D101		MA713	DIODE	1	
D104		MA728	DIODE	1	
D105		MA713	DIODE	1	
D301		MA141WA	DIODE	1	
D302		MA3047M	DIODE	1	
D303		MA728	DIODE	1	
D304		MA141K	DIODE	1	
D305		MA141WK	DIODE	1	
D306		MA141K	DIODE	1	
D308		MA110	DIODE	1	
			FILTERS		
FL301		ELB5B009	FILTER	1	
FL303		ELB4A002	FILTER	1	
FL304		ELB4A002	FILTER	1	
FL305		VLF0610	FILTER	1	
FL306		ELB4E004	FILTER	1	
FL307		ELB4A003	FILTER	1	
FL309		ELB4B003	FILTER	1	
FL310		ELB4B001	FILTER	1	
			CONNECTORS		
FP101		VJS2282	CONNECTOR	1	
FP301		VJS2137	CONNECTOR	1	
			ICS		
IC101		LM2902M	IC	1	
IC102		LM2902M	IC	1	
IC103		AN1358S	IC	1	
IC104		AN1358S	IC	1	
IC301		AN1358S	IC	1	
IC302		AN1358S	IC	1	
IC303		AN1358S	IC	1	
IC304		AN2153S	IC	1	
IC305		MN4052BS	IC	1	
IC306		LM2902M	IC	1	
IC307		UPD9313GB	IC	1	
IC308		VCR0200	IC	1	
IC309		MC08181A	IC	1	
IC310		VCR0199	IC	1	
			COILS		
L301		VLQ0163K150	COIL 15UH	1	
L302		VLQ0163K150	COIL 15UH	1	
L303		VLQ0163K150	COIL 15UH	1	
L304		VLQ0163K150	COIL 15UH	1	
L306		VLQ0163K330	COIL 33UH	1	
L308		VLQ0163K150	COIL 15UH	1	
L311		VLQ0163K150	COIL 15UH	1	
L312		VLQ0163K150	COIL 15UH	1	
L313		VLQ0163K150	COIL 15UH	1	
L315		VLQ0291	COIL	1	
			TRANSISTORS		
Q301		2SD1819	TRANSISTOR	1	

Ref.No.		Part No.	Part Name & Description	Pcs	Remarks
Q302		2SD1819	TRANSISTOR	1	
Q303		2SD1819	TRANSISTOR	1	
Q304		2SB1218	TRANSISTOR	1	
Q305		2SB1218	TRANSISTOR	1	
Q306		2SB1218	TRANSISTOR	1	
Q307		2SD1819	TRANSISTOR	1	
Q308		2SB1218	TRANSISTOR	1	
Q311		2SD1819	TRANSISTOR	1	
Q314		2SD1819	TRANSISTOR	1	
Q315		2SD1819	TRANSISTOR	1	
Q316		2SC3931	TRANSISTOR	1	
Q318		2SB1218	TRANSISTOR	1	
Q319		2SB1219	TRANSISTOR	1	
Q320		2SD1819	TRANSISTOR	1	
Q321		2SD1819	TRANSISTOR	1	
Q322		2SB1219	TRANSISTOR	1	
Q323		2SD874	TRANSISTOR	1	
Q324		2SD1819	TRANSISTOR	1	
Q325		2SD1819	TRANSISTOR	1	
Q327		2SD1819	TRANSISTOR	1	
Q328		2SC3931	TRANSISTOR	1	
Q330		2SD1819	TRANSISTOR	1	
Q331		2SB970	TRANSISTOR	1	
Q332		2SD1819	TRANSISTOR	1	
Q339		2SD1819	TRANSISTOR	1	
Q340		2SK316	TRANSISTOR	1	
Q353		2SC3931	TRANSISTOR	1	
			COMBINATION PARTS		
QR302		UN5215	COMBI.PARTS	1	
			RESISTORS		
R101		ERJ3GEYJ561	CHIP 1/20W 560	1	
R102		ERJ3GEYJ561	CHIP 1/20W 560	1	
R103		ERJ3GEYJ682	CHIP 1/20W 6.8K	1	
R104		ERJ3GEYJ153	CHIP 1/20W 15K	1	
R105		ERJ3GEYJ682	CHIP 1/20W 6.8K	1	
R106		ERJ3GEYJ822	CHIP 1/20W 8.2K	1	
R107		ERJ3GEYJ103	CHIP 1/20W 10K	1	
R109		ERJ3GEYJ153	CHIP 1/20W 15K	1	
R110		ERJ3GEYJ333	CHIP 1/20W 33K	1	
R111		ERJ3GEYJ333	CHIP 1/20W 33K	1	
R112		ERJ3GEYJ333	CHIP 1/20W 33K	1	
R113		ERJ3GEYJ333	CHIP 1/20W 33K	1	
R114		ERJ3GEYJ103	CHIP 1/20W 10K	1	
R116		ERJ3GEYJ102	CHIP 1/20W 1K	1	
R117		ERJ3GEYJ153	CHIP 1/20W 15K	1	
R118		ERJ3GEYJ223	CHIP 1/20W 22K	1	
R119		ERJ3GEYJ822	CHIP 1/20W 8.2K	1	
R120		ERJ3GEYJ470	CHIP 1/20W 47	1	
R121		ERJ3GEYJ823	CHIP 1/20W 82K	1	
R122		ERJ3GEYJ223	CHIP 1/20W 22K	1	
R123		ERJ3GEYJ123	CHIP 1/20W 12K	1	
R124		ERJ3GEYJ103	CHIP 1/20W 10K	1	
R125		ERJ3GEYJ103	CHIP 1/20W 10K	1	
R126		ERJ3GEYJ103	CHIP 1/20W 10K	1	
R127		ERJ3GEYJ104	CHIP 1/20W 100K	1	
R128		ERJ3GEYJ104	CHIP 1/20W 100K	1	
R129		ERJ3GEYJ104	CHIP 1/20W 100K	1	
R130		ERJ3GEYJ104	CHIP 1/20W 100K	1	
R134		ERJ3GEYJ123	CHIP 1/20W 12K	1	
R157		ERJ3GEYJ182	CHIP 1/20W 1.8K	1	
R158		ERJ3GEYJ682	CHIP 1/20W 6.8K	1	
R161		ERJ3GEYJ182	CHIP 1/20W 1.8K	1	
R162		ERJ3GEYJ273	CHIP 1/20W 27K	1	
R167		ERJ3GEYJ392	CHIP 1/20W 3.9K	1	
R168		ERDS2TJ184	C.RESISTOR 1/4W 180K	1	
R198		ERJ3GEYJ562	CHIP 1/20W 5.6K	1	
R302		ERJ3GEYJ273	CHIP 1/20W 27K	1	
R304		ERJ3GEYJ104	CHIP 1/20W 100K	1	
R306		ERJ3GEYJ823	CHIP 1/20W 82K	1	
R307		ERJ3GEYJ392	CHIP 1/20W 3.9K	1	

To guarantee the FUNCTION,SAFETY and RELIABLITY of repaired units,only use ORIGINAL REPLACEMENT PARTS which are listed with their part numbers in this parts list section.

Ref.No.		Part No.	Part Name & Description	Pcs	Remarks
R308		ERJ3GEYJ274	CHIP 1/20W 270K	1	
R310		ERJ3GEYJ105	CHIP 1/20W 1M	1	
R311		ERJ3GEYJ123	CHIP 1/20W 12K	1	
R312		ERJ3GEYJ563	CHIP 1/20W 56K	1	
R313		ERJ3GEYJ472	CHIP 1/20W 4.7K	1	
R314		ERJ3GEYJ823	CHIP 1/20W 82K	1	
R315		ERJ3GEYJ152	CHIP 1/20W 1.5K	1	
R316		ERJ3GEYJ104	CHIP 1/20W 100K	1	
R317		ERJ3GEYJ222	CHIP 1/20W 2.2K	1	
R318		ERJ3GEYJ473	CHIP 1/20W 47K	1	
R319		ERJ3GEYJ103	CHIP 1/20W 10K	1	
R320		ERJ3GEYJ103	CHIP 1/20W 10K	1	
R321		ERJ3GEYJ103	CHIP 1/20W 10K	1	
R322		ERJ3GEYJ103	CHIP 1/20W 10K	1	
R323		ERJ3GEYJ473	CHIP 1/20W 47K	1	
R324		ERJ3GEYJ562	CHIP 1/20W 5.6K	1	
R325		ERJ3GEYJ562	CHIP 1/20W 5.6K	1	
R326		ERJ3GEYJ104	CHIP 1/20W 100K	1	
R327		ERJ3GEYJ154	CHIP 1/20W 150K	1	
R328		ERJ3GEYJ123	CHIP 1/20W 12K	1	
R329		ERJ3GEYJ332	CHIP 1/20W 3.3K	1	
R330		ERJ3GEYJ183	CHIP 1/20W 18K	1	
R331		ERJ3GEYJ562	CHIP 1/20W 5.6K	1	
R332		ERJ3GEYJ102	CHIP 1/20W 1K	1	
R333		ERJ3GEYJ472	CHIP 1/20W 4.7K	1	
R334		ERJ3GEYJ102	CHIP 1/20W 1K	1	
R335		ERJ3GEYJ153	CHIP 1/20W 15K	1	
R336		ERJ3GEYJ822	CHIP 1/20W 8.2K	1	
R337		ERJ3GEYJ182	CHIP 1/20W 1.8K	1	
R338		ERJ3GEYJ103	CHIP 1/20W 10K	1	
R339		ERJ3GEYJ223	CHIP 1/20W 22K	1	
R340		ERJ3GEYJ223	CHIP 1/20W 22K	1	
R341		ERJ3GEYJ562	CHIP 1/20W 5.6K	1	
R342		ERJ3GEYJ103	CHIP 1/20W 10K	1	
R343		ERJ3GEYJ103	CHIP 1/20W 10K	1	
R346		ERJ3GEYJ152	CHIP 1/20W 1.5K	1	
R347		ERJ3GEYJ393	CHIP 1/20W 39K	1	
R348		ERJ3GEYJ183	CHIP 1/20W 18K	1	
R349		ERJ3GEYJ332	CHIP 1/20W 3.3K	1	
R350		ERJ3GEYJ183	CHIP 1/20W 18K	1	
R351		ERJ3GEYJ103	CHIP 1/20W 10K	1	
R352		ERJ3GEYJ103	CHIP 1/20W 10K	1	
R353		ERJ3GEYJ103	CHIP 1/20W 10K	1	
R354		ERJ3GEYJ102	CHIP 1/20W 1K	1	
R355		ERJ3GEYJ224	CHIP 1/20W 220K	1	
R356		ERJ3GEYJ824	CHIP 1/20W 820K	1	
R357		ERJ3GEYJ103	CHIP 1/20W 10K	1	
R358		ERJ3GEYJ183	CHIP 1/20W 18K	1	
R359		ERJ3GEYJ153	CHIP 1/20W 15K	1	
R362		ERJ3GEYJ472	CHIP 1/20W 4.7K	1	
R363		ERJ3GEYJ102	CHIP 1/20W 1K	1	
R366		ERJ3GEYJ273	CHIP 1/20W 27K	1	
R367		ERJ3GEYJ273	CHIP 1/20W 27K	1	
R368		ERJ3GEYJ273	CHIP 1/20W 27K	1	
R369		ERJ3GEYJ124	CHIP 1/20W 120K	1	
R371		ERJ3GEYJ102	CHIP 1/20W 1K	1	
R372		ERJ6GEYJ106	CHIP 1/16W 10M	1	
R373		ERJ3GEYJ563	CHIP 1/20W 56K	1	
R374		ERJ3GEYJ274	CHIP 1/20W 270K	1	
R375		ERJ3GEYJ334	CHIP 1/20W 330K	1	
R376		ERJ3GEYJ105	CHIP 1/20W 1M	1	
R377		ERJ3GEYJ563	CHIP 1/20W 56K	1	
R378		ERJ3GEYJ105	CHIP 1/20W 1M	1	
R379		ERJ3GEYJ334	CHIP 1/20W 330K	1	
R380		ERJ3GEYJ274	CHIP 1/20W 270K	1	
R381		ERJ3GEYJ563	CHIP 1/20W 56K	1	
R382		ERJ3GEYJ563	CHIP 1/20W 56K	1	
R383		ERJ6GEYJ106	CHIP 1/16W 10M	1	
R384		ERJ3GEYJ564	CHIP 1/20W 560K	1	
R385		ERJ3GEYJ154	CHIP 1/20W 150K	1	
R386		ERJ3GEYJ124	CHIP 1/20W 120K	1	
R387		ERJ3GEYJ473	CHIP 1/20W 47K	1	
R388		ERJ3GEYJ124	CHIP 1/20W 120K	1	
R389		ERJ3GEYJ333	CHIP 1/20W 33K	1	
R390		ERJ3GEYJ184	CHIP 1/20W 180K	1	

Ref.No.		Part No.	Part Name & Description	Pcs	Remarks
R391		ERJ3GEYJ562	CHIP 1/20W 5.6K	1	
R392		ERJ3GEYJ473	CHIP 1/20W 47K	1	
R393		ERJ3GEYJ562	CHIP 1/20W 5.6K	1	
R394		ERJ3GEYJ102	CHIP 1/20W 1K	1	
R395		ERJ3GEYJ102	CHIP 1/20W 1K	1	
R396		ERJ3GEYJ333	CHIP 1/20W 33K	1	
R397		ERJ3GEYJ103	CHIP 1/20W 10K	1	
R398		ERJ3GEYJ222	CHIP 1/20W 2.2K	1	
R399		ERJ3GEYJ181	CHIP 1/20W 180	1	
R401		ERJ3GEYJ681	CHIP 1/20W 680	1	
R402		ERJ3GEYJ102	CHIP 1/20W 1K	1	
R404		ERJ3GEYJ332	CHIP 1/20W 3.3K	1	
R405		ERJ3GEYJ473	CHIP 1/20W 47K	1	
R406		ERJ3GEYJ223	CHIP 1/20W 22K	1	
R407		ERJ6GEYF561	CHIP 1/16W 560	1	
R408		ERJ6GEYF561	CHIP 1/16W 560	1	
R409		ERJ3GEYJ103	CHIP 1/20W 10K	1	
R410		ERJ3GEYJ102	CHIP 1/20W 1K	1	
R411		ERJ3GEYJ183	CHIP 1/20W 18K	1	
R412		ERJ3GEYJ222	CHIP 1/20W 2.2K	1	
R415		ERJ6GEYF472	CHIP 1/16W 4.7K	1	
R416		ERJ6GEYF472	CHIP 1/16W 4.7K	1	
R417		ERJ3GEYJ332	CHIP 1/20W 3.3K	1	
R418		ERJ3GEYG682	CHIP 1/20W 6.8K	1	
R419		ERJ3GEYJ473	CHIP 1/20W 47K	1	
R420		ERJ3GEYJ103	CHIP 1/20W 10K	1	
R421		ERJ3GEYJ103	CHIP 1/20W 10K	1	
R422		ERJ3GEYJ472	CHIP 1/20W 4.7K	1	
R423		ERJ3GEYJ102	CHIP 1/20W 1K	1	
R424		ERJ3GEYJ102	CHIP 1/20W 1K	1	
R425		ERJ3GEYJ472	CHIP 1/20W 4.7K	1	
R426		ERJ3GEYJ563	CHIP 1/20W 56K	1	
R428		ERJ3GEYJ683	CHIP 1/20W 68K	1	
R429		ERJ3GEYJ104	CHIP 1/20W 100K	1	
R430		ERJ3GEYJ102	CHIP 1/20W 1K	1	
R431		ERJ3GEYJ104	CHIP 1/20W 100K	1	
R432		ERJ3GEYJ562	CHIP 1/20W 5.6K	1	
R433		ERJ3GEYJ562	CHIP 1/20W 5.6K	1	
R434		ERJ3GEYJ102	CHIP 1/20W 1K	1	
R435		ERJ3GEYJ153	CHIP 1/20W 15K	1	
R436		ERJ3GEYJ822	CHIP 1/20W 8.2K	1	
R437		ERJ3GEYJ103	CHIP 1/20W 10K	1	
R438		ERJ3GEYJ561	CHIP 1/20W 560	1	
R439		ERJ3GEYJ392	CHIP 1/20W 3.9K	1	
R440		ERJ3GEYJ331	CHIP 1/20W 330	1	
R441		ERJ3GEYJ472	CHIP 1/20W 4.7K	1	
R442		ERJ3GEYJ391	CHIP 1/20W 390	1	
R443		ERJ3GEYJ222	CHIP 1/20W 2.2K	1	
R444		ERJ3GEYJ222	CHIP 1/20W 2.2K	1	
R445		ERJ3GEYJ102	CHIP 1/20W 1K	1	
R446		ERJ3GEYJ271	CHIP 1/20W 270	1	
R447		ERJ3GEYJ102	CHIP 1/20W 1K	1	
R448		ERJ3GEYJ102	CHIP 1/20W 1K	1	
R449		ERJ3GEYJ102	CHIP 1/20W 1K	1	
R450		ERJ3GEYJ561	CHIP 1/20W 560	1	
R451		ERJ3GEYJ222	CHIP 1/20W 2.2K	1	
R459		ERJ3GEYJ123	CHIP 1/20W 12K	1	
R460		ERJ3GEYJ822	CHIP 1/20W 8.2K	1	
R461		ERJ3GEYJ122	CHIP 1/20W 1.2K	1	
R462		ERJ3GEYJ472	CHIP 1/20W 4.7K	1	
R466		ERJ3GEYJ103	CHIP 1/20W 10K	1	
R467		ERJ3GEYJ103	CHIP 1/20W 10K	1	
R468		ERJ3GEYJ333	CHIP 1/20W 33K	1	
R469		ERJ3GEYJ123	CHIP 1/20W 12K	1	
R471		ERJ3GEYJ392	CHIP 1/20W 3.9K	1	
R472		ERJ3GEYJ222	CHIP 1/20W 2.2K	1	
R473		ERJ3GEYJ332	CHIP 1/20W 3.3K	1	
R474		ERJ3GEYJ564	CHIP 1/20W 560K	1	
R476		ERJ3GEYJ562	CHIP 1/20W 5.6K	1	
R477		ERJ3GEYJ392	CHIP 1/20W 3.9K	1	
R478		ERJ3GEYJ223	CHIP 1/20W 22K	1	
R479		ERJ3GEYJ103	CHIP 1/20W 10K	1	
R480		ERJ3GEYJ472	CHIP 1/20W 4.7K	1	
R481		ERJ3GEYJ822	CHIP 1/20W 8.2K	1	
R482		ERJ3GEYJ563	CHIP 1/20W 56K	1	

To guarantee the FUNCTION,SAFETY and RELIABLITY of repaired units,only use ORIGINAL REPLACEMENT PARTS which are listed with their part numbers in this parts list section.

Ref.No.		Part No.	Part Name & Description	Pcs	Remarks
R483		ERJ3GEYJ333	CHIP 1/20W 33K	1	
R485		ERJ3GEYJ122	CHIP 1/20W 1.2K	1	
R485		ERJ3GEYJ222	CHIP 1/20W 2.2K	1	
R486		ERJ3GEYJ102	CHIP 1/20W 1K	1	
R487		ERJ3GEYJ102	CHIP 1/20W 1K	1	
R490		ERJ6GEY0R00	CHIP 1/16W 0	1	
R496		ERJ3GEYJ473	CHIP 1/20W 47K	1	
			THERMISTORS		
TH101		VRE0023	RESISTOR	1	
TH102		VRE0023	RESISTOR	1	
TH103		VRE0023	RESISTOR	1	
TH104		VRE0023	RESISTOR	1	
TH301		ERTD2FHK802	THERMISTOR	1	
			VARIABLE RESISTORS		
VR101		EVM7YSW00B14	V.RESISTOR 10K	1	
VR102		EVM7YSW00B14	V.RESISTOR 10K	1	
VR103		EVM7YSW00B54	V.RESISTOR 50K	1	
VR104		EVM7YSW00B25	V.RESISTOR 200K	1	
VR105		EVM7YSX00B14	V.RESISTOR 10K	1	
VR106		EVM7YSW00B14	V.RESISTOR 10K	1	
VR107		EVM7YSW00B24	V.RESISTOR	1	
VR302		EVM7YSX00B13	V.RESISTOR 1K	1	
VR303		EVM7YSX00B14	V.RESISTOR 10K	1	
VR304		EVM7YSW00B13	V.RESISTOR 1K	1	
VR305		EVM7YSW00B53	V.RESISTOR	1	
VR306		EVM7YSX00B14	V.RESISTOR 10K	1	
VR308		EVM7YSW00B55	V.RESISTOR 500K	1	
VR310		EVM7YSW00B14	V.RESISTOR 10K	1	
VR312		EVM7YSW00B14	V.RESISTOR 10K	1	
VR313		EVM7YSX00B14	V.RESISTOR 10K	1	
VR314		EVM7YSX00B54	V.RESISTOR 50K	1	
VR315		EVM7YSX00B54	V.RESISTOR 50K	1	
VR316		EVM7YSX00B13	V.RESISTOR 1K	1	
VR317		EVM7YSX00B13	V.RESISTOR 1K	1	
VR318		EVM7YSX00B24	V.RESISTOR 20K	1	
VR319		EVM7YSX00B24	V.RESISTOR 20K	1	
VR322		EVM7YSW00B14	V.RESISTOR 10K	1	
VR323		EVM7YSW00B14	V.RESISTOR 10K	1	
VR324		EVM7YSW00B14	V.RESISTOR 10K	1	
			MISELLENEOUS		
		VWJ0286	FLEXIBLE CABLE	1	
		VSC2207	SYNC SHIELD CASE	1	
		VSC2247	DELAY LINE SHIELD CASE	1	
	■	VEP23068C	SUB PROCESS C.B.A		
			CAPACITORS		
C123		ECSF1CE106	TANTALUM 16V 10U	1	
C125		ECEA1CKS100	E.CAPACITOR 16V 10U	1	
C126		ECUM1H101JCV	CHIP 50V 100P	1	
C370		ECUM1E102KBM	CHIP 25V 1000P	1	
C373		ECUM1E101JCM	CHIP 25V 100P	1	
			DIODE		
D102		MA728	DIODE	1	
			FILTER		
FL311		ELB4B002	FILTER	1	

Ref.No.		Part No.	Part Name & Description	Pcs	Remarks
			IC		
IC105		RC3415M	IC	1	
			CONNECTORS		
P1		VJP1598T	CONNECTOR(MALE) 5P	1	
P2		VJP1597T	CONNECTOR(MALE) 4P	1	
			TRANSISTORS		
Q344		2SB1218	TRANSISTOR	1	
Q345		2SD1819	TRANSISTOR	1	
Q346		2SB1218		1	
Q347		2SB1218		1	
Q348		2SK316	TRANSISTOR	1	
			RESISTORS		
R136		ERJ3GEYJ273	CHIP 1/20W 27K	1	
R137		ERJ3GEYJ182	CHIP 1/20W 1.8K	1	
R143		ERJ3GEYJ333	CHIP 1/20W 33K	1	
R144		ERJ3GEYJ682	CHIP 1/20W 6.8K	1	
R145		ERJ3GEYJ102	CHIP 1/20W 1K	1	
R146		ERJ3GEYJ102	CHIP 1/20W 1K	1	
R147		ERJ3GEYJ562	CHIP 1/20W 5.6K	1	
R148		ERJ3GEYJ102	CHIP 1/20W 1K	1	
R149		ERJ3GEYJ183	CHIP 1/20W 18K	1	
R150		ERJ3GEYJ102	CHIP 1/20W 1K	1	
R151		ERJ3GEYJ102	CHIP 1/20W 1K	1	
R152		ERJ3GEYJ102	CHIP 1/20W 1K	1	
			VARIABLE RESISTOR		
VR325		EVM7YSX00B34	V.RESISTOR	1	
	■	VEP28015E	AUTO FOCUS C.B.A.		
			CONNECTOR		
B601		VJP2227	CONNECTOR (MALE)	1	
			CAPACITORS		
C601		ECEA0JU471	E.CAPACITOR 6.3V 470U	1	
C602		ECUX1E270JCM	CHIP 25V 27P	1	
C603		ECUX1E330JCM	CHIP 25V 33P	1	
C604		ECUX1E330JCM	CHIP 25V 33P	1	
C605		ECUX1E103ZFM	CHIP 25V 0.01U	1	
C606		ECUX1E103ZFM	CHIP 25V 0.01U	1	
C607		ECUX1E103ZFM	CHIP 25V 0.01U	1	
C608		ECUX1E101JCM	CHIP 25V 100P	1	
C609		ECUX1E101JCM	CHIP 25V 100P	1	
C610		ECUX1E101JCM	CHIP 25V 100P	1	
C611		ECUX1E101JCM	CHIP 25V 100P	1	
C612		ECUM1C224ZFN	CHIP 16V 0.22U	1	
C613		ECUM1E473KB	CHIP 25V 0.047U	1	
C614		ECUM1E473KB	CHIP 25V 0.047U	1	
C615		ECUX1E104ZFN	CHIP 25V 0.1U	1	
C616		ECEA0JKS101I	E.CAPACITOR 6.3V 100U	1	
C617		ECEA0JKS101I	E.CAPACITOR 6.3V 100U	1	
C618		ECEA1CKS100	E.CAPACITOR 16V 10U	1	
C619		ECEA1CKS100	E.CAPACITOR 16V 10U	1	
C620		ECEA1CKS100	E.CAPACITOR 16V 10U	1	
C621		ECRJA020E12W	TRIMMER	1	
C622		ECUX1H391KBM	CHIP 50V 390P	1	
C623		ECUX1E104ZFN	CHIP 25V 0.1U	1	
C624		ECUM1C224ZFN	CHIP 16V 0.22U	1	
C625		ECUM1C224ZFN	CHIP 16V 0.22U	1	
C626		ECUX1E104ZFN	CHIP 25V 0.1U	1	

To guarantee the FUNCTION,SAFETY and RELIABLITY of repaired units,only use ORIGINAL REPLACEMENT PARTS which are listed with their part numbers in this parts list section.

Ref.No.		Part No.	Part Name & Description	Pcs	Remarks
C627		ECUX1E473FN	CHIP 25V 0.047U	1	
C628		ECUX1E273KBN	CHIP 25V 0.027U	1	
C629		ECUX1E273KBN	CHIP 25V 0.027U	1	
C630		ECUM1E683ZFN	CHIP 25V 0.063U	1	
C631		ECUX1E273KBN	CHIP 25V 0.027U	1	
C632		ECUX1E104ZFN	CHIP 25V 0.1U	1	
C633		ECUX1E223KBN	CHIP 25V 0.023U	1	
C634		ECEA0JSN220	E.CAPACITOR 6.3V 22U	1	
C635		ECUM1C224ZFN	CHIP 16V 0.22U	1	
C636		ECUX1E104ZFN	CHIP 25V 0.1U	1	
C637		ECUX1E473FN	CHIP 25V 0.047U	1	
C638		ECUM1C224ZFN	CHIP 16V 0.22U	1	
C639		ECUM1C224ZFN	CHIP 16V 0.22U	1	
C640		ECUM1H100DCV	CHIP 50V 10P	1	
C641		ECEA1CKS100	E.CAPACITOR 16V 10U	1	
C642		ECEA1CKS100	E.CAPACITOR 16V 10U	1	
C645		ECEA0JKS470	E.CAPACITOR 6.3V 47U	1	
C646		ECEA1HKS010	E.CAPACITOR 50V 1U	1	
C648		ECEA1CKS100	E.CAPACITOR 16V 10U	1	
C649		ECUM1H333KB	CHIP 50V 0.033U	1	
C650		ECUM1H333KB	CHIP 50V 0.033U	1	
C651		ECUX1E103ZFM	CHIP 50V 0.01U	1	
C652		ECEA0JKS101I	E.CAPACITOR 6.3V 100U	1	
C653		ECEA1CU100	E.CAPACITOR 16V 10U	1	
C654		ECEA1CKS100	E.CAPACITOR 16V 10U	1	
C655		ECUX1E104ZFN	CHIP 25V 0.1U	1	
C656		ECRJA020E12X	TRIMMER	1	
C657		ECUX1E104ZFN	CHIP 25V 0.1U	1	
C658		ECEA0JKS470	E.CAPACITOR 6.3V 47U	1	
C659		ECUX1E220JCM	CHIP 25V 22P	1	
C660		ECUX1E104ZFN	CHIP 25V 0.1U	1	
C661		ECUX1H391KBM	CHIP 50V 390P	1	
C663		ECUX1E102JCM	CHIP 25V 1000P	1	
			DIODES		
D602		MA110	DIODE	1	
D603		MA110	DIODE	1	
D604		1SS250	DIODE	1	
D605		1SS250	DIODE	1	
D606		MA110	DIODE	1	
D607		MA110	DIODE	1	
D608		MA110	DIODE	1	
D610		MA153	DIODE	1	
			FILTERS		
FL601		ELB4B004	FILTER	1	
FL602		VLF0595	FILTER	1	
FL603		ELB4B005	FILTER	1	
FL604		ELB4D001	FILTER	1	
FL605		VLF0596	FILTER	1	
			ICS		
IC601		MN15865VYV	IC	1	
IC602		AN2583S	IC	1	
IC603		AN78N05	IC	1	
IC604		NJM4558M-P	IC	1	
IC605		AN6562S	IC	1	
IC606		NJM3415M	IC	1	
IC607		MN1280Q	IC	1	
			COILS		
L602		VLQ0163K330	COIL 33UH	1	
L603		VLQEL05F101K	COIL 100UH	1	
			CONNECTOR		
P601		VJP1599T	CONNECTOR(MALE) 6P	1	
			TRANSISTORS		
Q601		2SD1819	TRANSISTOR	1	

Ref.No.		Part No.	Part Name & Description	Pcs	Remarks
Q602		2SD1819	TRANSISTOR	1	
Q603		2SB710	TRANSISTOR CHIP	1	
Q604		2SB1219		1	
Q605		2SD1820		1	
Q606		2SB1219		1	
Q607		2SD1820		1	
Q608		2SD1819	TRANSISTOR	1	
Q609		2SD1819	TRANSISTOR	1	
Q610		2SD1819	TRANSISTOR	1	
Q611		2SD1819	TRANSISTOR	1	
Q612		2SD1819	TRANSISTOR	1	
Q613		2SA1255	TRANSISTOR	1	
Q614		2SC3138	TRANSISTOR	1	
Q615		2SD1819	TRANSISTOR	1	
Q616		2SB1220	TRANSISTOR	1	
Q617		2SB1220	TRANSISTOR	1	
Q618		2SD1819	TRANSISTOR	1	
Q619		2SD1819	TRANSISTOR	1	
Q620		2SD1819	TRANSISTOR	1	
Q621		2SD1819	TRANSISTOR	1	
			RESISTORS		
R602		ERJ3GEYJ103	CHIP 1/20W 10K	1	
R603		ERJ3GEYJ103	CHIP 1/20W 10K	1	
R604		ERJ3GEYJ102	CHIP 1/20W 1K	1	
R605		ERJ3GEYJ683	CHIP 1/20W 68K	1	
R606		ERJ3GEYJ103	CHIP 1/20W 10K	1	
R607		ERJ3GEYJ102	CHIP 1/20W 1K	1	
R608		ERJ3GEYJ223	CHIP 1/20W 22K	1	
R609		ERJ3GEYJ563	CHIP 1/20W 56K	1	
R610		ERJ3GEYJ563	CHIP 1/20W 56K	1	
R611		ERJ3GEYJ272	CHIP 1/20W 2.7K	1	
R612		ERJ3GEYJ562	CHIP 1/20W 5.6K	1	
R613		ERJ3GEYJ272	CHIP 1/20W 2.7K	1	
R614		ERJ3GEYJ562	CHIP 1/20W 5.6K	1	
R615		ERJ3GEYJ272	CHIP 1/20W 2.7K	1	
R616		ERJ3GEYJ104	CHIP 1/20W 100K	1	
R617		ERJ3GEYJ104	CHIP 1/20W 100K	1	
R618		ERJ3GEYJ272	CHIP 1/20W 2.7K	1	
R619		ERJ3GEYJ102	CHIP 1/20W 1K	1	
R620		ERJ3GEYJ152	CHIP 1/20W 1.5K	1	
R621		ERJ3GEYJ152	CHIP 1/20W 1.5K	1	
R622		ERJ3GEYJ271	CHIP 1/20W 270	1	
R623		ERJ3GEYJ122	CHIP 1/20W 1.2K	1	
R624		ERJ3GEYJ102	CHIP 1/20W 1K	1	
R625		ERJ3GEYJ562	CHIP 1/20W 5.6K	1	
R626		ERJ3GEYJ102	CHIP 1/20W 1K	1	
R627		ERJ3GEYJ102	CHIP 1/20W 1K	1	
R628		ERJ3GEYJ102	CHIP 1/20W 1K	1	
R629		ERJ3GEYJ102	CHIP 1/20W 1K	1	
R630		ERJ3GEYJ751	CHIP 1/20W 750	1	
R631		ERJ3GEYJ331	CHIP 1/20W 330	1	
R632		ERJ3GEYJ473	CHIP 1/20W 47K	1	
R633		ERJ3GEYJ224	CHIP 1/20W 220K	1	
R634		ERJ3GEYJ224	CHIP 1/20W 220K	1	
R635		ERJ3GEYJ224	CHIP 1/20W 220K	1	
R636		ERJ3GEYJ224	CHIP 1/20W 220K	1	
R637		ERJ3GEYJ394	CHIP 1/20W 390K	1	
R638		ERJ6GEYF333	CHIP 1/16W 33K	1	
R639		ERJ6GEYF473	CHIP 1/16W 47K	1	
R640		ERJ3GEYJ394	CHIP 1/20W 390K	1	
R641		ERJ6GEYF333	CHIP 1/16W 33K	1	
R642		ERJ6GEYF473	CHIP 1/16W 47K	1	
R643		ERJ3GEYJ223	CHIP 1/20W 22K	1	
R644		ERJ3GEYJ223	CHIP 1/20W 22K	1	
R645		ERJ3GEYJ183	CHIP 1/20W 18K	1	
R646		ERJ3GEYJ224	CHIP 1/20W 220K	1	
R647		ERJ3GEYJ124	CHIP 1/20W 120K	1	
R648		ERJ3GEYJ102	CHIP 1/20W 1K	1	
R649		ERJ3GEYJ123	CHIP 1/20W 12K	1	
R650		ERJ3GEYJ123	CHIP 1/20W 12K	1	
R651		ERJ3GEYJ102	CHIP 1/20W 1K	1	
R652		ERJ3GEYJ153	CHIP 1/20W 15K	1	

To guarantee the FUNCTION,SAFETY and RELIABLITY of repaired units,only use ORIGINAL REPLACEMENT PARTS which are listed with their part numbers in this parts list section.

Ref.No.		Part No.	Part Name & Description	Pcs	Remarks
R653		ERJ3GEYJ682	CHIP 1/20W 6.8K	1	
R654		ERJ3GEYJ562	CHIP 1/20W 5.6K	1	
R655		ERJ3GEYJ562	CHIP 1/20W 5.6K	1	
R656		ERJ3GEYJ220	CHIP 1/20W 22	1	
R657		ERJ3GEYJ103	CHIP 1/20W 10K	1	
R658		ERJ3GEYJ103	CHIP 1/20W 10K	1	
R659		ERJ3GEYJ105	CHIP 1/20W 1M	1	
R660		ERJ3GEYJ104	CHIP 1/20W 100K	1	
R661		ERJ3GEYJ104	CHIP 1/20W 100K	1	
R662		ERJ3GEYJ104	CHIP 1/20W 100K	1	
R663		ERJ3GEYJ104	CHIP 1/20W 100K	1	
R664		ERJ3GEYJ104	CHIP 1/20W 100K	1	
R665		ERJ3GEYJ103	CHIP 1/20W 10K	1	
R666		ERJ3GEYJ103	CHIP 1/20W 10K	1	
R667		ERJ3GEYJ223	CHIP 1/20W 22K	1	
R668		ERJ3GEYJ222	CHIP 1/20W 2.2K	1	
R669		ERJ3GEYJ103	CHIP 1/20W 10K	1	
R670		ERJ3GEYJ103	CHIP 1/20W 10K	1	
R671		ERJ3GEYJ223	CHIP 1/20W 22K	1	
R672		ERJ3GEYJ223	CHIP 1/20W 22K	1	
R673		ERJ3GEYJ332	CHIP 1/20W 3.3K	1	
R674		ERJ3GEYJ332	CHIP 1/20W 3.3K	1	
R675		ERJ3GEYJ102	CHIP 1/20W 1K	1	
R676		ERJ3GEYJ103	CHIP 1/20W 10K	1	
R677		ERJ3GEYJ102	CHIP 1/20W 1K	1	
R678		ERJ3GEYJ103	CHIP 1/20W 10K	1	
R679		ERJ3GEYJ332	CHIP 1/20W 3.3K	1	
R680		ERJ3GEYJ332	CHIP 1/20W 3.3K	1	
R681		ERJ3GEYJ223	CHIP 1/20W 22K	1	
R682		ERJ3GEYJ223	CHIP 1/20W 22K	1	
R683		ERJ3GEYJ562	CHIP 1/20W 5.6K	1	
R684		ERJ3GEYJ681	CHIP 1/20W 680	1	
R685		ERJ3GEYJ105	CHIP 1/20W 1M	1	
R686		ERJ3GEYJ333	CHIP 1/20W 33K	1	
R687		ERJ3GEYJ182	CHIP 1/20W 1.8K	1	
R688		ERJ3GEYJ333	CHIP 1/20W 33K	1	
R689		ERJ3GEYJ182	CHIP 1/20W 1.8K	1	
R690		ERJ3GEYJ393	CHIP 1/20W 39K	1	
R691		ERJ3GEYJ563	CHIP 1/20W 56K	1	
R692		ERJ3GEYJ100	CHIP 1/20W 10	1	
R693		ERJ3GEYJ103	CHIP 1/20W 10K	1	
R694		ERJ3GEYJ103	CHIP 1/20W 10K	1	
R695		ERJ3GEYJ103	CHIP 1/20W 10K	1	
R696		ERJ3GEYJ103	CHIP 1/20W 10K	1	
R697		ERJ3GEYJ394	CHIP 1/20W 390K	1	
R698		ERJ3GEYJ474	CHIP 1/20W 470K	1	
R699		ERJ3GEYJ220	CHIP 1/20W 22	1	
R800		ERJ3GEYJ221	CHIP 1/20W 220	1	
R801		ERJ3GEYJ332	CHIP 1/20W 3.3K	1	
R804		ERJ3GEYJ104	CHIP 1/20W 100K	1	
R805		ERJ3GEYJ101	CHIP 1/20W 100	1	
			TRANSFORMAR		
T601		ETE13K43AY	TRANSFORMAR	1	
			VARIABLE RESISTORS		
VR601		EVML1GA00B53	V.RESISTOR 5K	1	
VR602		EVML1GA00B15	V.RESISTOR 100K	1	
VR603		EVM7YSX00B14	V.RESISTOR 10K	1	
			CRYSTAL OSCILLATOR		
X601		VSX0196	CRYSTAL OSCILLATOR	1	
	■	VEP22074A	CDS PACK C.B.A		
			CAPACITORS		

Ref.No.		Part No.	Part Name & Description	Pcs	Remarks
C501		ECUX1E180JCM	CHIP 25V 18P	1	
C502		ECUX1E473FN	CHIP 25V 0.047U	1	
C503		ECUX1E180JCM	CHIP 25V 18P	1	
C504		ECST1DC685Z	T.CAPACITOR 20V 6.8U	1	
C506		ECUX1E180JCM	CHIP 25V 18P	1	
C507		ECST1AC106Z	T.CAPACITOR 10V 10U	1	
			IC		
IC501		AN2010S	IC	1	
			CONNECTOR		
PK501		VJR0365	CONNECTOR	1	
			RESISTORS		
R501		ERJ3GEYJ102	CHIP 1/20W 1K	1	
	■	VEP23061B	ENCODER PACK C.B.A.		
			CAPACITORS		
C901		ECST1CY105Z	T.CAPACITOR 16V 1U	1	
C903		ECUM1C224ZFN	CHIP 16V 0.22U	1	
C904		ECST1AC106Z	T.CAPACITOR 10V 10U	1	
C905		ECUX1E330JCM	CHIP 25V 33P	1	
C906		ECUX1E102KBM	CHIP 25V 1000P	1	
C907		ECUX1E102KBM	CHIP 25V 1000P	1	
C908		ECUX1E104ZFN	CHIP 25V 0.1U	1	
C909		ECST1AC106Z	T.CAPACITOR 10V 10U	1	
C910		ECUX1E104ZFN	CHIP 25V 0.1U	1	
C911		ECUM1C224ZFN	CHIP 16V 0.22U	1	
C912		ECUX1H103ZFN	CHIP 50V 0.01U	1	
			IC		
IC901		AN2253FA	IC	1	
L901		VLQ0163K330	COIL 33UH	1	
			CONNECTOR		
PK901		VJR0367	CONNECTOR	1	
PK902		VJR0367	CONNECTOR	1	
			TRANSISTORS		
Q901		2SA1532	TRANSISTOR	1	
Q902		2SB1218		1	
			RESISTORS		
R901		ERJ3GEYJ223	CHIP 1/20W 22K	1	
R902		ERJ3GEYJ273	CHIP 1/20W 27K	1	
R903		ERJ3GEYJ102	CHIP 1/20W 1K	1	
R904		ERJ3GEYJ274	CHIP 1/20W 270K	1	
R907		ERJ3GEYJ393	CHIP 1/20W 39K	1	
R908		ERJ3GEYJ153	CHIP 1/20W 15K	1	
R909		ERJ3GEYJ223	CHIP 1/20W 22K	1	
R910		ERJ3GEYJ273	CHIP 1/20W 27K	1	
R911		ERJ3GEYJ333	CHIP 1/20W 33K	1	
R912		ERJ3GEYJ103	CHIP 1/20W 10K	1	
R913		ERJ3GEYJ102	CHIP 1/20W 1K	1	
R914		ERJ3GEYJ182	CHIP 1/20W 1.8K	1	
R915		ERJ3GEYJ560	CHIP 1/20W 56	1	

To guarantee the FUNCTION,SAFETY and RELIABLITY of repaired units,only use ORIGINAL REPLACEMENT PARTS which are listed with their part numbers in this parts list section.

Ref.No.		Part No.	Part Name & Description	Pcs	Remarks
R916		ERJ3GEYJ222	CHIP 1/20W 2.2K	1	
R917		ERJ3GEYJ103	CHIP 1/20W 10K	1	
R918		ERJ3GEYG112	CHIP 1/20W 1.1K	1	
R919		ERJ3GEYJ333	CHIP 1/20W 33K	1	
R921		ERJ3GEYJ333	CHIP 1/20W 33K	1	
R923		ERJ3GEYJ102	CHIP 1/20W 1K	1	
	■	VEP22073C	SENSOR C.B.A.		
B201		VJP1948	CONNECTOR (MALE)	1	
			CAPACITORS		
C201		ECSF1AE476	TANTALUM 10V 47U	1	
C202		ECUX1E105JCM	CHIP 25V 1U	1	
C203		ECUX1E105JCM	CHIP 25V 1U	1	
C204		ECUX1H390JCM	CHIP 50V 39P	1	
C206		ECRLC010A12V	TRIMMER	1	
C207		ECSF1AE106	TANTALUM 10V 10U	1	
C208		ECEA0JKS220	E.CAPACITOR 6.3V 22U	1	
C209		ECSF1CE336	TANTALUM 16V 33U	1	
C210		ECEA1HKS010	E.CAPACITOR 50V 1U	1	
C211		ECUM1E104MD	CHIP 25V 0.1U	1	
C212		ECSF1EE106	T.CAPACITOR 25V 10U	1	
C213		ECUX1E473FN	CHIP 25V 0.047U	1	
C214		ECEA1HKS010	E.CAPACITOR 50V 1U	1	
C215		ECUX1E270JCM	CHIP 25V 27P	1	
C216		ECUX1E270JCM	CHIP 25V 27P	1	
C217		ECSF1EE475	TANTALUM 25V 4.7U	1	
C218		ECUX1E270JCM	CHIP 25V 27P	1	
C219		ECUX1E270JCM	CHIP 25V 27P	1	
C220		ECSF1CE476	TANTALUM 16V 47U	1	
C221		ECUX1E270JCM	CHIP 25V 27P	1	
C222		ECUX1E270JCM	CHIP 25V 27P	1	
C223		ECUM1H682KBV	CHIP 50V 0.068U	1	
C224		ECUX1E473FN	CHIP 25V 0.047U	1	
C225		ECUX1E104ZFN	CHIP 25V 0.1U	1	
C226		ECSF1VE475	T.CAPACITOR 35V 4.7U	1	
C227		ECSF1AE106	TANTALUM 10V 10U	1	
C228		ECSF1EE106	T.CAPACITOR 25V 10U	1	
C229		ECSF0JE476	TANTALUM 6.3V 47U	1	
C230		ECUX1E104ZFN	CHIP 25V 0.1U	1	
C231		ECUX1E104ZFN	CHIP 25V 0.1U	1	
C232		ECUX1E104ZFN	CHIP 25V 0.1U	1	
C233		ECUX1E104ZFN	CHIP 25V 0.1U	1	
C236		ECUX1E105JCM	CHIP 25V 1U	1	
C237		ECUX1E104ZFN	CHIP 25V 0.1U	1	
C238		ECUX1E330JCM	CHIP 25V 33P	1	
C239		ECUX1E330JCM	CHIP 25V 33P	1	
C240		ECUX1E330JCM	CHIP 25V 33P	1	
C241		ECUX1E101JCM	CHIP 25V 100P	1	
C242		ECUX1E104ZFN	CHIP 25V 0.1U	1	
C243		ECUX1E104ZFN	CHIP 25V 0.1U	1	
C244		ECUX1E473FN	CHIP 25V 0.047U	1	
C245		ECUX1E104ZFN	CHIP 25V 0.1U	1	
C246		ECUX1E105JCM	CHIP 25V 1U	1	
C247		ECEA1CKK100	E.CAPACITOR 16V 10U	1	
C248		ECUX1E104ZFN	CHIP 25V 0.1U	1	
C249		ECUX1E104ZFN	CHIP 25V 0.1U	1	
C250		ECUX1E104ZFN	CHIP 25V 0.1U	1	
C251		ECUX1E330JCM	CHIP 25V 33P	1	
C252		ECUX1E104ZFN	CHIP 25V 0.1U	1	
C501		ECUX1E180JCM	CHIP 25V 18P	1	
C502		ECUX1E473FN	CHIP 25V 0.047U	1	
C503		ECUX1E180JCM	CHIP 25V 18P	1	
C504		ECST1DC685Z	T.CAPACITOR 20V 6.8U	1	
C506		ECUX1E180JCM	CHIP 25V 18P	1	
C507		ECST1AC106Z	T.CAPACITOR 10V 10U	1	

Ref.No.		Part No.	Part Name & Description	Pcs	Remarks
			DIODS		
D202		MA141A	DIODE	1	
D204		MA110	DIODE	1	
D205		MA110	DIODE	1	
D207		MA159	DIODE	1	
D209		MA110	DIODE	1	
D210		MA141K	DIODE	1	
FL201		ELB5B010	FILTER	1	
FP201		VJS2125	CONNECTOR	1	
IC201		MN53015XBM	IC	1	
IC202		UPD6147G	IC	1	
IC501		AN2010S	IC	1	
L201		VLQ0163K150	COIL 15UH	1	
L202		VLQ0187K150	COIL 15UH	1	
L203		VLQ0187K150	COIL 15UH	1	
L204		VLQ0163K150	COIL 15UH	1	
L205		VLQ0163K150	COIL 15UH	1	
L206		VLQ0163K150	COIL 15UH	1	
L207		VLQ0187K150	COIL 15UH	1	
L210		VLQ0291	COIL	1	
L211		VLQ0291	COIL	1	
L212		VLQ0291	COIL	1	
PK501		VJR0365	CONNECTOR	1	
Q201		2SD1819	TRANSISTOR	1	
Q202		2SD1819	TRANSISTOR	1	
Q203		2SD1819	TRANSISTOR	1	
Q204		2SC3930	TRANSISTOR	1	
Q205		2SA1610	TRANSISTOR	1	
Q206		2SC4176	TRANSISTOR	1	
Q207		2SA1610	TRANSISTOR	1	
Q208		2SC4176	TRANSISTOR	1	
Q209		2SA1610	TRANSISTOR	1	
Q210		2SC4176	TRANSISTOR	1	
Q211		2SC3930	TRANSISTOR	1	
			RESISTORS		
R201		ERJ3GEYJ331	CHIP 1/20W 330	1	
R202		ERJ3GEYJ331	CHIP 1/20W 330	1	
R203		ERJ3GEYJ105	CHIP 1/20W 1M	1	
R204		ERJ3GEYJ102	CHIP 1/20W 1K	1	
R205		ERJ3GEYJ333	CHIP 1/20W 33K	1	
R206		ERJ3GEYJ183	CHIP 1/20W 18K	1	
R207		ERJ3GEYJ103	CHIP 1/20W 10K	1	
R208		ERJ3GEYJ471	CHIP 1/20W 470	1	
R209		ERJ3GEYJ473	CHIP 1/20W 47K	1	
R210		ERJ3GEYJ183	CHIP 1/20W 18K	1	
R211		ERJ3GEYJ472	CHIP 1/20W 4.7K	1	
R212		ERJ3GEYJ330	CHIP 1/20W 33	1	
R213		ERJ3GEYJ681	CHIP 1/20W 680	1	
R214		ERJ3GEYJ681	CHIP 1/20W 680	1	
R215		ERJ3GEYJ273	CHIP 1/20W 27K	1	
R216		ERJ6GEYJ103	CHIP 1/16W 10K	1	
R217		ERJ3GEYJ101	CHIP 1/20W 100	1	

To guarantee the FUNCTION,SAFETY and RELIABLITY of repaired units,only use ORIGINAL REPLACEMENT PARTS which are listed with their part numbers in this parts list section.

Ref.No.		Part No.	Part Name & Description	Pcs	Remarks
R218		ERJ3GEYJ472	CHIP 1/20W 4.7K	1	
R219		ERJ3GEYJ102	CHIP 1/20W 1K	1	
R220		ERJ3GEYJ562	CHIP 1/20W 5.6K	1	
R221		ERJ3GEYJ101	CHIP 1/20W 100	1	
R222		ERJ3GEYJ123	CHIP 1/20W 12K	1	
R223		ERJ3GEYJ331	CHIP 1/20W 330	1	
R224		ERJ3GEYJ331	CHIP 1/20W 330	1	
R225		ERJ3GEYJ102	CHIP 1/20W 1K	1	
R226		ERJ3GEYJ102	CHIP 1/20W 1K	1	
R227		ERJ3GEYJ272	CHIP 1/20W 2.7K	1	
R228		ERJ3GEYJ221	CHIP 1/20W 220	1	
R229		ERJ3GEYJ102	CHIP 1/20W 1K	1	
R230		ERJ3GEYJ105	CHIP 1/20W 1M	1	
R231		ERJ3GEYJ104	CHIP 1/20W 100K	1	
R232		ERJ3GEYJ101	CHIP 1/20W 100	1	
R233		ERJ3GEYJ101	CHIP 1/20W 100	1	
R234		ERJ3GEYJ272	CHIP 1/20W 2.7K	1	
R235		ERJ3GEYJ104	CHIP 1/20W 100K	1	
R236		ERJ3GEYJ270	CHIP 1/20W 27	1	
R501		ERJ3GEYJ102	CHIP 1/20W 1K	1	
VR201		EVM7YSX00B25	V.RESISTOR 200K	1	
VR202		EVM7YSW00B54	V.RESISTOR 50K	1	
X201		VSX0240	CRISTAL OSCILLATOR	1	
	■	VEP27033B	EVF C.B.A.		
			CAPACITORS		
C701		ECEA0JKS101I	E.CAPACITOR 6.3V 100U	1	
C702		ECSE1CY684V	T.CAPACITOR 16V 0.68U	1	
C703		ECEA1CKS100	E.CAPACITOR 16V 10U	1	
C704		ECEA0JKS470	E.CAPACITOR 6.3V 47U	1	
C705		ECEA0JK221	E.CAPACITOR 6.3V 220U	1	
C706		ECUX1H681KN	CHIP 50V 680P	1	
C707		ECUM1C2242FN	CHIP 16V 0.22U	1	
C708		ECUX1E223KBN	CHIP 25V 0.023U	1	
C709		ECEA1CKS100	E.CAPACITOR 16V 10U	1	
C710		ECUM1H152JN	CHIP 50V 1500P	1	
C711		ECEA1CKS100	E.CAPACITOR 16V 10U	1	
C712		ECEA1AF470	E.CAPACITOR 10V 47U	1	
C713		ECEA0JK221	E.CAPACITOR 6.3V 220U	1	
C714		ECQK1392JZ	P.CAPACITOR 100V 3900P	1	
C715		ECEA1CKS220I	E.CAPACITOR 16V 22U	1	
C716		ECUX1H181KN	CHIP 50V 180P	1	
C717		ECEA1HKS4R7	E.CAPACITOR 50V 4.7U	1	
C718		VCK0057K121	C.CAPACITOR 120P	1	
C719		VCK0058K331	C.CAPACITOR 330P	1	
C720		ECUX1H473ZFN	CHIP 50V 0.047U	1	
C721		ECUX1H473ZFN	CHIP 50V 0.047U	1	
C722		ECUX1H104ZFN	CHIP 50V 0.1U	1	
D701		MA151K	DIODE	1	
D702		ERA91-02	DIODE	1	
D703		ERA34-10	DIODE	1	
IC701		AN2510S	IC	1	
L701		ELC04D002	COIL	1	

Ref.No.		Part No.	Part Name & Description	Pcs	Remarks
L702		ELH5L313	COIL	1	
P701		VJP1233T	CONNECTOR	1	
P702		VJP1231T	CONNECTOR(MALE) 4P	1	
Q701		2SB709	TRANSISTOR CHIP	1	
Q702		2SD968A	TRANSISTOR	1	
Q703		2SA1022	TRANSISTOR	1	
			RESISTORS		
R701		ERJ6GEYK6R8	CHIP 1/10W 6.8	1	
R702		ERJ6GEYG682	CHIP 1/16W 6.8K	1	
R703		ERJ6GEYJ392	CHIP 1/16W 3.9K	1	
R704		ERJ6GEYJ182	CHIP 1/16W 1.8K	1	
R705		ERJ6GEYK4R7	CHIP 1/16W 4.7	1	
R706		ERJ6GEYJ150	CHIP 1/16W 15	1	
R707		ERJ6GEYJ151	CHIP 1/16W 150	1	
R708		ERJ6GEYJ102	CHIP 1/16W 1K	1	
R709		ERJ6GEYJ163	CHIP 1/16W 16K	1	
R710		ERJ6GEYJ561	CHIP 1/16W 560	1	
R711		ERJ6GEYJ102	CHIP 1/16W 1K	1	
R712		ERJ6GEYJ124	CHIP 1/16W 120K	1	
R713		ERJ6GEYJ222	CHIP 1/16W 2.2K	1	
R714		ERJ6GEYJ682	CHIP 1/16W 6.8K	1	
R715		ERJ6GEYJ102	CHIP 1/16W 1K	1	
R716		ERJ6GEYJ102	CHIP 1/16W 1K	1	
R717		ERJ6GEYJ561	CHIP 1/16W 560	1	
R718		ERJ6GEYJ222	CHIP 1/16W 2.2K	1	
R719		ERJ8GCJ222V	CHIP 1/8W 2.2K	1	
R720		ERJ6GEYJ274	CHIP 1/16W 270K	1	
R721		ERJ6GEYJ223	CHIP 1/16W 22K	1	
R722		ERJ6GEYJ682	CHIP 1/16W 6.8K	1	
R723		ERJ6GEYJ102	CHIP 1/16W 1K	1	
R724		ERJ6GEYJ105	CHIP 1/16W 1M	1	
R726		ERJ6GEYK225	CHIP 1/16W 2.2M	1	
R727		ERJ6GEYK185	CHIP 1/16W 1.8M	1	
R728		ERJ6GEYK335	CHIP 1/16W 3.3M	1	
R729		ERJ6GEYK125	CHIP 1/16W 1.2M	1	
R730		ERJ8GCYJ821		1	
T701		ETF14L26A	FLYBACK TRANS.	1	
TH701		VRT0012	THERMISTER	1	
VR701		VRV0079B221K	V.RESISTOR	1	
VR702		VRV0079B222K	V.RESISTOR	1	
VR704		VRV0027B225K	V.RESISTOR	1	
VR705		VRV0027B105K	V.RESISTOR	1	
	■	VEP03482A	MAIN C.B.A.		
			CAPACITORS		
C1001		ECUX1H820JCM	CHIP 50V 82P	1	
C1002		ECUX1H560KBM	CHIP 50V 56P	1	
C1003		ECUX1H471KBM	CHIP 50V 470P	1	
C1004		ECUX1C105ZF	CHIP 16V 1U	1	
C1005		ECUX1E473FN	CHIP 25V 0.047U	1	

To guarantee the FUNCTION,SAFETY and RELIABLITY of repaired units,only use ORIGINAL REPLACEMENT PARTS which are listed with their part numbers in this parts list section.

Ref.No.		Part No.	Part Name & Description	Pcs	Remarks
C1006		ECUX1E473FN	CHIP 25V 0.047U	1	
C1007		ECEA1EU101	E.CAPACITOR 25V 100U	1	
C1008		ECUX1C105ZF	CHIP 16V 1U	1	
C1009		ECUX1C105ZF	CHIP 16V 1U	1	
C1010		ECEA1EU101	E.CAPACITOR 25V 100U	1	
C1011		ECUX1E473FN	CHIP 25V 0.047U	1	
C1012		ECEA0JKJ221	CHIP 6.3V 220P	1	
C1013		ECUX1E223ZFN	CHIP 25V 0.022U	1	
C1014		ECUX1E223ZFN	CHIP 25V 0.022U	1	
C1015		ECEA1AKJ221	E.CAPACITOR 10V 220U	1	
C1016		ECEA0JKJ221	E.CAPACITOR 6.3V 220U	1	
C1019		ECEA1AKJ221	E.CAPACITOR 10V 220U	1	
C1020		ECEA1CKAJ101	E.CAPACITOR 16V 100U	1	
C1021		ECEA1CKAJ101	E.CAPACITOR 16V 100U	1	
C1026		ECUX1H153KBN	CHIP 50V 0.015U	1	
C1027		ECUX1H681JN	CHIP 50V 680P	1	
C1028		ECEA1CKA470	E.CAPACITOR 16V 47U	1	
C1029		ECEA1CKA220	E.CAPACITOR 16V 22U	1	
C1030		ECEA1AKA330	E.CAPACITOR 10V 33U	1	
C1031		ECEA1AKA330	E.CAPACITOR 10V 33U	1	
C1032		ECUX1H102KBN	CHIP 50V 1000P	1	
C1033		ECEA1CKK100	E.CAPACITOR 16V 10U	1	
C1034		ECUX1E103ZFM	CHIP 25V 0.01U	1	
C1035		ECEA0JKJ221	E.CAPACITOR 6.3V 220U	1	
C1040		ECUX1E223ZFN	CHIP 25V 0.022U	1	
C1041		ECEA1AK101	E.CAPACITOR 10V 100U	1	
C1042		VCYD1C104MR1	S.CAPACITOR 16V 0.1U	1	
C2001		ECUX1E101JCM	CHIP 25V 100P	1	
C2002		ECUX1E101JCM	CHIP 25V 100P	1	
C2003		ECUX1E103ZFM	CHIP 25V 0.01U	1	
C2004		ECEA0JKA470	E.CAPACITOR 6.3V 47U	1	
C2005		ECEA0JKA470	E.CAPACITOR 6.3V 47U	1	
C2006		ECUX1E473FN	CHIP 25V 0.047U	1	
C2007		ECUX1H472ZFM	CHIP 25V 470P	1	
C2009		ECEA0JK220	E.CAPACITOR 6.3V 22U	1	
C2010		ECEA0JK220	E.CAPACITOR 6.3V 22U	1	
C2011		ECUX1E473FN	CHIP 25V 0.047U	1	
C2012		ECUX1E222KBM	CHIP 25V 2200P	1	
C2013		ECUX1E102KBM	CHIP 25V 1000P	1	
C2014		ECEA1VKN2R2	E.CAPACITOR 35V 2.2U	1	
C2015		ECUX1C105ZF	CHIP 16V 1U	1	
C2016		ECUX1C105ZF	CHIP 16V 1U	1	
C2017		ECUX1E102KBM	CHIP 25V 1000P	1	
C2018		ECUX1E102KBM	CHIP 25V 1000P	1	
C2019		ECEA0GK470	E.CAPACITOR 4V 47U	1	
C2020		ECUX1H471KBM	CHIP 50V 470P	1	
C2021		ECUX1C105ZF	CHIP 16V 1U	1	
C2022		ECUX1C105ZF	CHIP 16V 1U	1	
C2023		ECUX1E333ZFN	CHIP 25V 0.033U	1	
C2024		ECEA0JK220	E.CAPACITOR 6.3V 22U	1	
C2025		ECEA0JK470	E.CAPACITOR 6.3V 47U	1	
C2026		ECEA0JKA470	E.CAPACITOR 6.3V 47U	1	
C2027		ECUX1E103ZFM	CHIP 25V 0.01U	1	
C2028		ECUX1C105ZF	CHIP 16V 1U	1	
C2029		ECUX1E102KBM	CHIP 25V 1000P	1	
C2030		ECUX1E104ZFN	CHIP 25V 0.1U	1	
C2032		ECUX1E103ZFM	CHIP 25V 0.01U	1	
C2033		ECUX1C105ZF	CHIP 16V 1U	1	
C2034		ECUX1E101JCM	CHIP 25V 100P	1	
C2035		ECUX1E102KBM	CHIP 25V 1000P	1	
C2036		ECUX1C105ZF	CHIP 16V 1U	1	
C2037		ECEA0JKA470	E.CAPACITOR 6.3V 47U	1	
C2038		ECEA0JK220	E.CAPACITOR 6.3V 22U	1	
C2039		ECEA0GK101	E.CAPACITOR 4V 100U	1	
C2040		ECUX1E103ZFM	CHIP 25V 0.01U	1	
C2041		ECUX1C105ZF	CHIP 16V 1U	1	
C2042		ECEA0JKA470	CHIP 6.3V 47U	1	
C2043		ECEA1CKK100	E.CAPACITOR 16V 10U	1	
C2044		ECUX1E104ZFN	CHIP 25V 0.1U	1	
C2045		ECQV1H393JZ	P.CAPACITOR 50V 0.039U	1	
C2046		ECUX1E333ZFN	CHIP 25V 0.033U	1	
C2047		ECUX1E333ZFN	CHIP 25V 0.033U	1	
C2048		ECUX1E333ZFN	CHIP 25V 0.033U	1	
C2049		ECUX1E104ZFN	CHIP 25V 0.1U	1	
C2050		ECUX1C105ZF	CHIP 16V 1U	1	

Ref.No.		Part No.	Part Name & Description	Pcs	Remarks
C2051		ECEA0GK470	E.CAPACITOR 4V 47U	1	
C2053		ECEA0JK101	E.CAPACITOR 6.3V 100U	1	
C2054		ECUX1H333ZFN	CHIP 50V 0.033U	1	
C2055		ECEA0JKA470	E.CAPACITOR 6.3V 1U	1	
C2056		ECEA1EKK010	E.CAPACITOR 25V 1U	1	
C2057		ECEA1EKK010	E.CAPACITOR 25V 1U	1	
C2058		ECEA1EKK010	E.CAPACITOR 25V 1U	1	
C2059		ECUX1H472ZFM	CHIP 50V 4700P	1	
C2060		ECUX1H472ZFM	CHIP 50V 4700P	1	
C2061		ECUX1H472ZFM	CHIP 50V 4700P	1	
C2062		ECEA1AKA470	E.CAPACITOR 10V 47U	1	
C2063		ECEA1CKA470	E.CAPACITOR 10V 47U	1	
C2064		ECEA1CKA470	E.CAPACITOR 10V 47U	1	
C2065		ECEA1EKK2R2	E.CAPACITOR 25V 2.2U	1	
C2066		ECEA1EKK2R2	E.CAPACITOR 25V 2.2U	1	
C2067		ECEA1EKK2R2	E.CAPACITOR 25V 2.2U	1	
C2068		ECUX1H103ZFN	CHIP 50V 0.01U	1	
C2069		ECUX1H103ZFN	CHIP 50V 0.01U	1	
C2070		ECUX1H103ZFN	CHIP 50V 0.01U	1	
C2072		ECUM1C474ZFM	CHIP 16V 0.47U	1	
C2073		ECUM1C474ZFM	CHIP 16V 0.47U	1	
C2074		ECUX1E105JCM	CHIP 25V 1U	1	
C2075		ECUX1E105JCM	CHIP 25V 1U	1	
C2076		ECUX1C105ZF	CHIP 25V 1U	1	
C2077		ECUX1E103ZFM	CHIP 16V 1U	1	
C2078		ECUX1H473ZFN	CHIP 50V 0.047U	1	
C2079		ECUX1H560JCM	CHIP 50V 56P	1	
C2081		ECEA0GK470	E.CAPACITOR 4V 47U	1	
C2082		VCYD1C103MR1	S.CAPACITOR 16V 0.01U	1	
C3001		ECUX1E103ZFM	CHIP 25V 0.01U	1	
C3002		ECEA1EKK3R3	E.CAPACITOR 25V 3.3U	1	
C3005		ECEA1AK470	E.CAPACITOR 10V 47U	1	
C3007		ECUX1E223ZFN	CHIP 25V 0.022U	1	
C3007		ECUX1H223ZFN	CHIP 50V 0.022U	1	
C3010		ECEA0JK221	E.CAPACITOR 6.3V 220U	1	
C3011		ECEA0JK221	E.CAPACITOR 6.3V 220U	1	
C3012		ECUX1E220JCM	CHIP 25V 22P	1	
C3013		ECUX1E122KBM	CHIP 25V 1200P	1	
C3014		ECUX1H103ZFN	CHIP 50V 0.01U	1	
C3015		ECUX1E103ZFM	CHIP 25V 0.01U	1	
C3016		ECUX1E103ZFM	CHIP 25V 0.01U	1	
C3017		ECEA1EKK4R7	E.CAPACITOR 25V 4.7U	1	
C3018		ECEA0JK220	E.CAPACITOR 6.3V 22U	1	
C3019		ECEA1EKK2R2	E.CAPACITOR 25V 2.2U	1	
C3020		ECEA1EKK3R3	E.CAPACITOR 25V 3.3U	1	
C3021		ECUX1H103ZFN	CHIP 50V 0.01U	1	
C3022		ECUX1E330JCM	CHIP 25V 33P	1	
C3024		ECUX1C105ZF	CHIP 16V 1U	1	
C3025		ECUX1H471KBM	CHIP 50V 470P	1	
C3026		ECUX1E271KBM	CHIP 25V 270P	1	
C3027		ECUM1H221JCV	CHIP 50V 220P	1	
C3028		ECEA1HKKOR1	E.CAPACITOR 50V 0.1U	1	
C3029		ECUX1H820JCM	CHIP 50V 82P	1	
C3030		ECUX1H390JCM	CHIP 50V 39P	1	
C3032		ECUX1E103ZFM	CHIP 25V 0.01U	1	
C3033		ECEA0JU221	E.CAPACITOR 6.3V 220U	1	
C3034		ECUX1E103ZFM	CHIP 25V 0.01U	1	
C3045		ECUX1H680JCM	CHIP 50V 68P	1	
C3047		ECUX1H560JCM	CHIP 50V 56P	1	
C3049		ECUM1H821KBV	CHIP 50V 820P	1	
C3050		ECUX1E103ZFM	CHIP 25V 0.01U	1	
C3051		ECEA0JKA470	E.CAPACITOR 6.3V 47U	1	
C3052		ECUX1E103KBM	CHIP 25V 0.01U	1	
C3053		ECEA1HKK010	E.CAPACITOR 50V 1U	1	
C3054		ECUX1E103ZFM	CHIP 25V 0.01U	1	
C3055		ECUX1E103ZFM	CHIP 25V 0.01U	1	
C3056		ECUX1E103ZFM	CHIP 25V 0.01U	1	
C3057		ECUX1E101JCM	CHIP 25V 100P	1	
C3058		ECUX1E103ZFM	CHIP 25V 0.01U	1	
C3059		ECUX1H470JCM	CHIP 50V 47U	1	
C3060		ECUX1E100CCM		1	
C3061		ECUX1E103ZFM		1	
C3062		ECUX1E103ZFM		1	
C3063		ECEA1EKK3R3	E.CAPACITOR 25V 3.3U	1	
C3064		ECUX1E103ZFM		1	

To guarantee the FUNCTION,SAFETY and RELIABLITY of repaired units,only use ORIGINAL REPLACEMENT PARTS which are listed with their part numbers in this parts list section.

Ref.No.		Part No.	Part Name & Description	Pcs	Remarks
C3065		ECUX1E103ZFM		1	
C3066		ECEA0JU221	E.CAPACITOR 6.3V 220U	1	
C3068		ECUX1E103ZFM		1	
C3070		ECUX1H680JCM		1	
C3071		ECUX1E104ZFN	CHIP 25V 0.1U	1	
C3074		ECUX1E103ZFM		1	
C3075		ECUX1E103ZFM		1	
C3076		ECUX1E104ZFN	CHIP 25V 0.1U	1	
C3077		ECEA1CKK100	E.CAPACITOR 16V 10U	1	
C3080		ECUX1H103ZFN	CHIP 50V 0.01U	1	
C3085		ECUX1E151JVM		1	
C3086		ECUX1E104ZFN	CHIP 25V 0.1U	1	
C3087		ECUX1H681KBM		1	
C3098		ECCF1H040CC	C.CAPACITOR 50V 4P	1	
C3100		ECUX1E270JCM		1	
C3103		ECEA1EKK3R3	E.CAPACITOR 25V 3.3U	1	
C3110		ECKF1H103ZF	C.CAPACITOR 50V 0.01U	1	
C3111		ECCF1H101JC	C.CAPACITOR 50V 100P	1	
C3113		ECCF1H470JC	C.CAPACITOR 50V 47P	1	
C3114		ECCF1H820JC	C.CAPACITOR 50V 82P	1	
C3501		ECUX1E103ZFM		1	
C3502		ECUX1E103ZFM		1	
C3503		ECUX1E102JCM		1	
C3504		ECUX1E151JVM		1	
C3505		ECUX1H390JCM		1	
C3506		ECUX1E103ZFM		1	
C3507		ECUX1E103ZFM		1	
C3508		ECQV1H394JZ	P.CAPACITOR 50V 0.39U	1	
C4001		ECQP1222JZ	P.CAPACITOR 100V 2200P	1	
C4002		ECRHC120N11	TRIMER	1	
C4003		ECUX1H562KBN	CHIP 50V 5600P	1	
C4004		ECUX1H472KBM		1	
C4005		ECUX1E122KBM		1	
C4007		ECEA1HKL010	E.CAPACITOR 50V 1U	1	
C4008		ECUX1H333ZFN	CHIP 50V 0.033U	1	
C4009		ECEAJKA330		1	
C4011		ECUX1E822KBM		1	
C4012		ECEA0JK220	E.CAPACITOR 6.3V 22U	1	
C4013		ECEA1HKK010	E.CAPACITOR 50V 1U	1	
C4014		ECUX1E182KBM		1	
C4015		ECEA0JKA470		1	
C4016		ECEA1CKA470		1	
C4017		ECEA1CKA220		1	
C4018		ECEAJKA330		1	
C4019		ECEA1HKK010	E.CAPACITOR 50V 1U	1	
C4021		ECUX1H333ZFN	CHIP 50V 0.033U	1	
C4024		ECEA0JK220	E.CAPACITOR 6.3V 22U	1	
C4025		ECEA1CKA220		1	
C4026		ECEA0JK220	E.CAPACITOR 6.3V 22U	1	
C4027		ECUX1H682KBN	CHIP 50V 6800P	1	
C4028		ECEA1EKK2R2	E.CAPACITOR 25V 2.2U	1	
C4029		ECUX1E222KBM		1	
C4030		ECEA1AK101	E.CAPACITOR 10V 100U	1	
C4031		ECUX1E103ZFM		1	
C4032		ECEA1HKN010	E.CAPACITOR 50V 1U	1	
C4033		ECEA0GK470	E.CAPACITOR 4V 47U	1	
C4034		ECEA0JKA101		1	
C4036		ECEA0JKA101		1	
C4037		ECEA1EKK4R7	E.CAPACITOR 25V 4.7U	1	
C4038		ECEA1AKA330		1	
C4039		ECEA1EKK2R2	E.CAPACITOR 25V 2.2U	1	
C4040		ECKF1H151KB	C.CAPACITOR 50V 150P	1	
C5001		ECUX1H473ZFN	CHIP 50V 0.047U	1	
C5002		ECSF1VE105		1	
C5003		ECUX1H473ZFN	CHIP 50V 0.047U	1	
C5004		ECSF1VE105		1	
C5005		ECUX1H473ZFN	CHIP 50V 0.047U	1	
C5006		ECSF1VE105		1	
C5007		ECUX1H473ZFN	CHIP 50V 0.047U	1	
C5008		ECSF1VE105		1	
C5009		ECUX1C105ZF		1	
C5010		ECUX1E103ZFM		1	
C5011		ECUX1E103ZFM		1	
C5012		ECUX1C105ZF		1	

Ref.No.		Part No.	Part Name & Description	Pcs	Remarks
C5013		ECUX1C105ZF		1	
C5014		ECUX1E103ZFM		1	
C5015		ECUX1E103ZFM		1	
C5016		ECUX1C105ZF		1	
C5017		ECUX1E101JCM		1	
C5018		ECUX1E101JCM		1	
C5019		ECUX1E101JCM		1	
C5020		ECUX1E101JCM		1	
C5021		ECUX1C105ZF		1	
C5022		ECUX1E151JVM		1	
C5023		ECUX1E270JCM		1	
C5024		ECEB0JU101	E.CAPACITOR 6.3V 100U	1	
C5025		ECUX1E103ZFM		1	
C5026		ECUX1H820JCM		1	
C5030		ECUX1E330JCM		1	
C5032		ECUX1E103ZFM		1	
C5033		ECUX1E332KBM		1	
C5034		ECEA0JKA470		1	
C5035		ECUX1E103ZFM		1	
C5036		ECUX1E104ZFN	CHIP 25V 0.1U	1	
C5037		ECEA0JKA470		1	
C5038		ECUX1E103ZFM		1	
C5039		ECEA1CKK100	E.CAPACITOR 16V 10U	1	
C5040		ECUX1E103ZFM		1	
C5041		ECUX1E104ZFN	CHIP 25V 0.1U	1	
C5047		ECUX1H473ZFN	CHIP 50V 0.047U	1	
C5048		ECUX1H473ZFN	CHIP 50V 0.047U	1	
C5049		ECUX1H473ZFN	CHIP 50V 0.047U	1	
C5050		ECUX1H473ZFN	CHIP 50V 0.047U	1	
C6001		ECEA0JKS470	E.CAPACITOR 6.3V 47U	1	
C6002		ECUX1E104ZFN	CHIP 25V 0.1U	1	
C6003		ECEA1EKK3R3	E.CAPACITOR 25V 3.3U	1	
C6004		ECEA1CKK100	E.CAPACITOR 16V 10U	1	
C6005		ECUX1E220JCM		1	
C6006		ECUX1E105JCM		1	
C6007		ECUX1E105JCM		1	
C6008		ECUX1C105ZF		1	
C6009		ECUX1E103ZFM		1	
C6010		ECUX1E103ZFM		1	
C6011		ECUX1E103ZFM		1	
C6012		ECUX1E103ZFM		1	
C6013		ECUX1E104ZFN	CHIP 25V 0.1U	1	
C6014		ECEA0JKA221	E.CAPACITOR 6.3V 220U	1	
C6015		ECUX1E103ZFM		1	
C6016		ECUM1H102ZFV	CHIP 50V 1000P	1	
C6017		ECUM1H102ZFV	CHIP 50V 1000P	1	
C6018		ECUX1E104ZFN	CHIP 25V 0.1U	1	
C6019		ECUX1E104ZFN	CHIP 25V 0.1U	1	
C6020		ECUX1E104ZFN	CHIP 25V 0.1U	1	
C6021		ECEA1EU470	E.CAPACITOR 25V 47U	1	
C6022		ECUX1H562ZFM		1	
C6025		ECEA1EKK010	E.CAPACITOR 25V 1U	1	
C6026		ECUX1E104ZFN	CHIP 25V 0.1U	1	
C6027		VCYD1C104MR1	S.CAPACITOR 16V 0.1U	1	
C6028		ECEA0JKK100	E.CAPACITOR 6.3V 10U	1	
C6029		ECUX1E104ZFN	CHIP 25V 0.1U	1	
C6029		VCYD1C104MR1	S.CAPACITOR 16V 0.1U	1	
C6031		MA141A		1	
C6033		ECKF1H391KB	C.CAPACITOR 50V 390P	1	
C8001		ECUM1H103ZFM	CHIP 50V 0.01U	1	
C8002		ECUM1H121JCM	CHIP 50V 120P	1	
C8003		ECUX1H103ZFN	CHIP 50V 0.01U	1	
C8005		ECUX1E103ZFM		1	
C8006		ECUX1H103ZFN	CHIP 50V 0.01U	1	
C8009		ECUX1H472ZFM		1	
C8010		ECUX1H470JCM		1	
C8011		ECUX1H103ZFN	CHIP 50V 0.01U	1	
C8012		ECUX1E103KBM		1	
C8013		ECQB1H223JZ	P.CAPACITOR 50V 0.022U	1	
C8014		ECUX1E104ZFN	CHIP 25V 0.1U	1	
C8015		ECUX1H103ZFN	CHIP 50V 0.01U	1	
C8016		ECUX1E104ZFN	CHIP 25V 0.1U	1	
C8017		ECUX1H103ZFN	CHIP 50V 0.01U	1	
C8018		ECUX1H103ZFN	CHIP 50V 0.01U	1	
C8019		ECUX1H103ZFN	CHIP 50V 0.01U	1	

To guarantee the FUNCTION,SAFETY and RELIABLITY of repaired units,only use ORIGINAL REPLACEMENT PARTS which are listed with their part numbers in this parts list section.

Ref.No.		Part No.	Part Name & Description	Pcs	Remarks
C8020		ECUX1H103ZFN	CHIP 50V 0.01U	1	
C8021		ECUX1E103ZFM		1	
C8022		ECUX1H103ZFN	CHIP 50V 0.01U	1	
C8023		ECUX1H103ZFN	CHIP 50V 0.01U	1	
C8024		ECUX1H103ZFN	CHIP 50V 0.01U	1	
C8025		ECUX1H103ZFN	CHIP 50V 0.01U	1	
C8026		ECUX1C105ZF		1	
C8027		ECEA0GK470	E.CAPACITOR 4V 47U	1	
C8028		ECUM1H030CCV	CHIP 50V 3P	1	
C8029		ECUX1E102KBM		1	
C8030		ECEA0JU221	E.CAPACITOR 6.3V 220U	1	
C8031		ECUX1H103ZFN	CHIP 50V 0.01U	1	
C8032		ECEA0JKA470		1	
C8033		ECUX1E104ZFN	CHIP 25V 0.1U	1	
C8034		ECUX1E102KBM		1	
C8035		ECEA1CKK100	E.CAPACITOR 16V 10U	1	
C8036		ECEA1EKK2R2	E.CAPACITOR 25V 2.2U	1	
C8037		ECUX1H103ZFN	CHIP 50V 0.01U	1	
C8038		ECUX1H680JCM		1	
C8039		ECUX1E103ZFM		1	
C8040		ECUX1H473ZFN	CHIP 50V 0.047U	1	
C8043		ECUX1E331KBM		1	
C8044		ECUX1H103ZFN	CHIP 50V 0.01U	1	
C8045		ECUX1E103ZFM		1	
C8046		ECUX1E103ZFM		1	
C8050		ECUX1H560KBM		1	
C8051		ECEA1CKK100	E.CAPACITOR 16V 10U	1	
C8052		ECKF1H681KB	C.CAPACITOR 50V 680P	1	
D1001		MA141WK	DIODE	1	
D1003		MA159A		1	
D1004		MA3075H		1	
D2001		DA204U		1	
D2002		DA204U		1	
D2003		DA204U		1	
D2005		MA121		1	
D2008		MA141K	DIODE	1	
D2009		DAN202U		1	
D2010		DAN202U		1	
D2011		DAN202U		1	
D2012		MA141K	DIODE	1	
D2013		MA141K	DIODE	1	
D3002		DAN202U		1	
D3003		MA141K	DIODE	1	
D3005		1SS283	DIODE	1	
D4001		DAN202U		1	
D4002		MA141K	DIODE	1	
D4004		MA141K	DIODE	1	
D6003		DAP202U		1	
D6004		MA159A		1	
D6006		MA141K	DIODE	1	
D6007		MA141K	DIODE	1	
D6008		MA141K	DIODE	1	
D6010		MA141K	DIODE	1	
D6012		DAN202U		1	
D6013		DAP202U		1	
D6014		DAP202U		1	
D6015		DAP202U		1	
D6016		DAP202U		1	
D6017		DAP202U		1	
D6018		DAN202U		1	
D6019		MA141WK	DIODE	1	
D6023		MA141WA		1	
D6025		MA141WK	DIODE	1	
D6026		MA141K	DIODE	1	
D6034		MA165	DIODE	1	OR 1SS119, 1SS254
D8001		MA141A		1	
D8002		MA141K	DIODE	1	
DL3001		EFDCD124A13A	DELAY LINE	1	
F1001		VSF0059	FUSE	1	
FL3001		ELB4C005	FILTER	1	
FL3003		VLF0599	FILTER	1	
FL3004		VLF0599	FILTER	1	
FL3005		VLF0593		1	
FL5001		VLF0625	FILTER	1	
FL5002		VLF0593		1	
FL8001		ELB4B010	FILTER	1	
FL8002		ELB4B025	FILTER	1	
FL8003		VLF0626	FILTER	1	
IC1001		BA6149LS	IC	1	
IC1002		UN102	IC	1	
IC1003		UPC358G2		1	
IC1004		UPC393G2		1	
IC2001		MN67461VDJF	IC	1	
IC2002		AN3798S		1	
IC2005		BA6430S	IC	1	
IC2006		TA8402F		1	
IC2007		MN1551VYJS		1	
IC3001		AN3215S	IC	1	
IC3002		AN3321S	IC	1	
IC4001		UPC1513G		1	
IC4002		UPC2300G		1	
IC4003		M5201L	IC	1	
IC5001		AN3311S	IC	1	
IC6001		MN15361VYF		1	
IC6002		S6700A		1	
IC6003		AN6914S	IC	1	
IC6004		M54543L	IC	1	
IC6005		UPD4094BG		1	
IC8001		AN6367S	IC	1	
IC8002		MN6163AS	IC	1	
L1001		ELC07D003		1	
L1002		ELC08D038		1	
L1003		ELC06D005	COIL	1	
L1004		ELC07D003		1	
L1005		ELC08D027		1	
L1006		ELC07D003		1	
L1007		ELC08D025		1	
L1008		VLQ0129	COIL 300UH	1	
L1011		VLQEL05F221K	COIL 220UH	1	
L1012		VLQEL05F221K	COIL 220UH	1	
L1013		VLQEL05F101K	COIL 100UH	1	
L3001		VLQEL05F101K	COIL 100UH	1	
L3002		VLQEL05F101K	COIL 100UH	1	
L3004		VLQEL05F101K	COIL 100UH	1	
L3005		VLQEL05F101K	COIL 100UH	1	
L3007		VLQ0187K180	COIL 180UH	1	
L3008		VLQEL04F820K		1	
L3012		VLQEL04F180K	COIL	1	
L3013		VLQEL05F101K	COIL 100UH	1	
L3015		VLQ0187K180	COIL 180UH	1	
L3501		VLQEL04F100K		1	
L3502		VLQEL04F120K		1	
L4001		VLQEL05F221K	COIL 220UH	1	
L4002		ELTMR822JB	TRANSFORMER	1	
L4003		ELTMR153KB	TRANSFORMER	1	
L5001		VLQEL04F180K	COIL	1	
L5002		VLQ0163K330	COIL 33UH	1	
L5003		VLQEL04F150K		1	
L5006		VLQEL04F220K		1	
L5007		VLQEL05F101K	COIL 100UH	1	
L5008		VLQEL05F101K	COIL 100UH	1	
L5009		VLQEL05F681K	COIL 680UH	1	

To guarantee the FUNCTION, SAFETY and RELIABLITY of repaired units, only use ORIGINAL REPLACEMENT PARTS which are listed with their part numbers in this parts list section.

Ref.No.		Part No.	Part Name & Description	Pcs	Remarks
L5010		VLQEL05F101K	COIL 100UH	1	
L5013		VLQEL05F101K	COIL 100UH	1	
L5015		VLQEL05F151K	COIL 150UH	1	
L6001		VLQEL05F101K	COIL 100UH	1	
L8001		VLQEL05F101K	COIL 100UH	1	
L8002		VLQEL04F470K	COIL	1	
L8004		VLQ0187K150	COIL 15UH	1	
L8006		VLQ0163J121		1	
L8009		VLQEL04F101K		1	
P1001		VJP1230T	CONNECTOR(MALE) 3P	1	
P1003		VJP1229T	CONNECTOR(MALE) 2P	1	
P2001		VJS2120	CONNECTOR	1	
P2002		VJP1923T	CONNECTOR	1	
P2003		VJP1595T	CONNECTOR(MALE) 2P	1	
P3002		VJP1598T	CONNECTOR(MALE) 5P	1	
P3003		VJS2119	CONNECTOR	1	
P3004		VJP1601T	CONNECTOR(MALE) 8P	1	
P3005		VJP1595T	CONNECTOR(MALE) 2P	1	
P4001		VJP1596T	CONNECTOR(MALE) 3P	1	
P4002		VJP1598T	CONNECTOR(MALE) 5P	1	
P4003		VJP1595T	CONNECTOR(MALE) 2P	1	
P4004		VJP1595R	CONNECTOR(MALE) 2P	1	
P4005		VJP1595T	CONNECTOR(MALE) 2P	1	
P5001		VJS2117	CONNECTOR	1	
P6002		VJP1605T	CONNECTOR(MALE) 12P	1	
P6003		VJS2107	CONNECTOR	1	
P6004		VJP1229T	CONNECTOR(MALE) 2P	1	
P6005		VJP1595T	CONNECTOR(MALE) 2P	1	
P6006		VJP1596T	CONNECTOR(MALE) 3P	1	
P6007		VJP1598T	CONNECTOR(MALE) 5P	1	
P6009		VJP1597T	CONNECTOR(MALE) 4P	1	
P6010		VJP1599T	CONNECTOR(MALE) 6P	1	
P6011		VJR0365	CONNECTOR	1	
P6012		VJP1229T	CONNECTOR(MALE) 2P	1	
P6013		VJP1595R	CONNECTOR(MALE) 2P	1	
Q1001		2SB1218		1	
Q1002		2SB956		1	
Q1003		2SD1293M		1	
Q1004		2SD1328	TRANSISTOR CHIP	1	
Q1005		2SD1328	TRANSISTOR CHIP	1	
Q2001		2SB956		1	
Q2002		2SB956		1	
Q2003		2SB956		1	
Q3001		XN1401		1	
Q3006		2SC3938		1	
Q3007		2SC3938		1	
Q3018		XN4601		1	
Q3019		XN4601		1	
Q3021		2SC3931		1	
Q3024		2SB1218		1	
Q3025		2SB970	TRANSISTOR CHIP	1	
Q3026		2SB970	TRANSISTOR CHIP	1	
Q3036		2SC3931		1	
Q3037		2SB1218		1	
Q3038		2SD1820		1	
Q3501		2SA812		1	
Q3502		2SA1175		1	
Q3503		2SD1819	TRANSISTOR	1	
Q4001		2SD1820		1	
Q4002		2SD1328	TRANSISTOR CHIP	1	
Q4003		2SD1819		1	
Q4005		2SB1219		1	
Q4007		2SD1823		1	
Q4008		2SD1819		1	
Q4009		2SD1819		1	
Q5001		XN1401		1	
Q5002		XN1501		1	
Q5003		XN1501		1	
Q5007		XN1401		1	

Ref.No.		Part No.	Part Name & Description	Pcs	Remarks
Q5008		XN1501		1	
Q5009		XN1501		1	
Q5013		2SC3931		1	
Q5014		2SD1819		1	
Q5015		2SC3931		1	
Q5018		2SD1819	TRANSISTOR	1	
Q6001		2SB1218		1	
Q6002		2SB779		1	
Q6003		2SB779		1	
Q6004		2SD1820		1	
Q6005		2SD1819		1	
Q8001		2SC3931		1	
Q8002		2SD1819		1	
Q8004		2SB1218		1	
Q8005		2SC3931		1	
Q8006		2SC3931		1	
Q8007		2SD1819		1	
Q8010		2SD1819		1	
Q8011		XN1401		1	
Q8012		2SB1218		1	
Q8013		2SC3931		1	
Q8014		2SD1819	TRANSISTOR	1	
QR1001		GA1L4M		1	
QR1002		UN2213	TRANSISTOR-RESISTOR	1	
QR2004		GA1L4M		1	
QR2005		UN5117		1	
QR3001		UN5112		1	
QR3006		GA1F4M		1	
QR3007		XN1212		1	
QR3013		XN1215		1	
QR3019		UN5112		1	
QR3027		UN5217		1	
QR3030		2SD1819		1	
QR3035		UN5213		1	
QR4002		GA1F4M		1	
QR4003		UN5112		1	
QR4004		GA1L4M		1	
QR5001		XN1213		1	
QR5002		XN1112		1	
QR5003		XN1213		1	
QR5004		XN1112		1	
QR5008		GA1L4M		1	
QR6003		GA1L4M		1	
QR6004		XN1213		1	
QR6009		GA1L4M		1	
QR6010		GA1L4M		1	
QR6011		GN1L4M		1	
QR6012		GA1L4M		1	
QR6013		GN1A4Z		1	
QR6014		GN1A4Z		1	
QR6015		GN1A4Z		1	
QR6016		GN1L4M		1	
QR6017		GN1A4Z		1	
QR6018		GN1A4Z		1	
QR6019		GA1L4M		1	
QR6023		GN1A4Z		1	
QR6024		GA1L4M		1	
QR6025		GA1L4M		1	
QR6026		GN1L4M		1	
QR6027		UN5213		1	
QR6028		UN5213		1	
QR6033		UN5213		1	
QR6035		UN5113		1	
QR6036		UN5213		1	
QR6037		XN4316	COMBI.PARTS	1	
QR8001		UN5112		1	
QR8003		GA1F4M		1	
QR8004		XN4215		1	
QR8005		UN5112		1	
QR8006		UN5217		1	
QR8007		GA1L4M		1	

To guarantee the FUNCTION,SAFETY and RELIABLITY of repaired units,only use ORIGINAL REPLACEMENT PARTS which are listed with their part numbers in this parts list section.

Ref.No.		Part No.	Part Name & Description	Pcs	Remarks
			RESISTORS		
R1001		ERJ3GEYJ563	CHIP 1/20W 56K	1	
R1002		ERJ3GEYJ222	CHIP 1/20W 2.2K	1	
R1003		ERJ3GEYJ103	CHIP 1/20W 10K	1	
R1004		ERJ3GEYJ222	CHIP 1/20W 2.2K	1	
R1005		ERJ3GEYJ103	CHIP 1/20W 10K	1	
R1006		ERJ3GEYJ472	CHIP 1/20W 4.7K	1	
R1007		ERJ3GEYJ103	CHIP 1/20W 10K	1	
R1008		ERJ3GEYJ334	CHIP 1/20W 330K	1	
R1009		ERJ3GEYJ154	CHIP 1/20W 150K	1	
R1012		ERJ8GCYJ122	CHIP 1/8W 1.2K	1	
R1013		ERJ8GCYJ122	CHIP 1/8W 1.2K	1	
R1014		ERJ8GCYJ152		1	
R1015		ERJ8GCYJ152		1	
R1018		ERJ8GCYJ122	CHIP 1/8W 1.2K	1	
R1019		ERJ8GCYJ821		1	
R1020		ERJ3GEYJ183	CHIP 1/20W 18K	1	
R1021		ERJ3GEYJ183	CHIP 1/20W 18K	1	
R1022		ERJ3GEYJ681	CHIP 1/20W 680	1	
R1023		ERJ3GEYJ681	CHIP 1/20W 680	1	
R1024		ERJ3GEYJ473	CHIP 1/20W 47K	1	
R1025		ERJ3GEYJ183	CHIP 1/20W 18K	1	
R1026		ERJ3GEYJ391	CHIP 1/20W 390	1	
R1027		ERJ3GEYJ391	CHIP 1/20W 390	1	
R1028		ERJ3GEYJ391	CHIP 1/20W 390	1	
R1029		ERJ3GEYJ391	CHIP 1/20W 390	1	
R1030		ERJ3GEYJ391	CHIP 1/20W 390	1	
R1031		ERJ3GEYJ391	CHIP 1/20W 390	1	
R1032		ERJ3GEYJ821	CHIP 1/20W 820	1	
R1033		ERJ3GEYJ102	CHIP 1/20W 1K	1	
R1035		ERJ3GEYJ105	CHIP 1/20W 1M	1	
R1036		ERJ3GEYJ222	CHIP 1/20W 2.2K	1	
R1037		ERJ3GEYJ272	CHIP 1/20W 2.7K	1	
R1038		ERJ3GEYJ472	CHIP 1/20W 4.7K	1	
R1039		ERJ3GEYJ272	CHIP 1/20W 2.7K	1	
R1040		ERJ3GEYJ822	CHIP 1/20W 8.2K	1	
R1041		ERJ3GEYJ101	CHIP 1/20W 100	1	
R1042		ERJ3GEYJ823	CHIP 1/20W 82K	1	
R1043		ERJ3GEYJ153	CHIP 1/20W 15K	1	
R1044		ERJ8GCYJ560		1	
R1045		ERJ3GEYJ104	CHIP 1/20W 100K	1	
R1046		ERJ3GEYJ684	CHIP 1/20W 680K	1	
R1047		ERJ3GEYJ103	CHIP 1/20W 10K	1	
R1048		ERJ3GEYJ102	CHIP 1/20W 1K	1	
R1049		VSF0015A10	FUSE	1	
R1050		VSF0015A08	IC PROTECTOR	1	
R1051		VSF0059	FUSE	1	
R2001		ERJ3GEYJ102	CHIP 1/20W 1K	1	
R2002		ERJ3GEYJ102	CHIP 1/20W 1K	1	
R2003		ERJ3GEYJ222	CHIP 1/20W 2.2K	1	
R2004		ERJ3GEYJ333	CHIP 1/20W 33K	1	
R2005		ERJ3GEYJ473	CHIP 1/20W 47K	1	
R2006		ERJ3GEYJ104	CHIP 1/20W 100K	1	
R2007		ERJ3GEYJ154	CHIP 1/20W 150K	1	
R2009		ERJ3GEYJ154	CHIP 1/20W 150K	1	
R2010		ERJ3GEYJ822	CHIP 1/20W 8.2K	1	
R2011		ERJ3GEYJ563	CHIP 1/20W 56K	1	
R2012		ERJ3GEYJ274	CHIP 1/20W 270K	1	
R2013		ERJ3GEYJ154	CHIP 1/20W 150K	1	
R2014		ERJ3GEYJ103	CHIP 1/20W 10K	1	
R2015		ERJ3GEYJ123	CHIP 1/20W 12K	1	
R2017		ERJ3GEYJ103	CHIP 1/20W 10K	1	
R2018		ERJ3GEYJ102	CHIP 1/20W 1K	1	
R2019		ERJ3GEYJ105	CHIP 1/20W 1M	1	
R2020		ERJ3GEYJ222	CHIP 1/20W 2.2K	1	
R2022		ERJ3GEYJ271	CHIP 1/20W 270	1	
R2025		ERJ3GEYJ103	CHIP 1/20W 10K	1	
R2028		ERJ3GEYJ105	CHIP 1/20W 1M	1	
R2029		ERJ3GEYJ103	CHIP 1/20W 10K	1	
R2030		ERJ3GEYJ273	CHIP 1/20W 27K	1	
R2031		ERJ3GEYJ333	CHIP 1/20W 33K	1	
R2032		ERJ3GEYJ274	CHIP 1/20W 270K	1	
R2034		ERJ3GEYJ152	CHIP 1/20W 1.5K	1	

Ref.No.		Part No.	Part Name & Description	Pcs	Remarks
R2036		ERJ3GEYJ330	CHIP 1/20W 33	1	
R2037		ERJ3GEYJ330	CHIP 1/20W 33	1	
R2038		ERDS2TJR68	C.RESISTOR 1/4W 0.68	1	
R2039		ERJ3GEYJ330	CHIP 1/20W 33	1	
R2040		ERJ3GEYJ102	CHIP 1/20W 1K	1	
R2041		ERJ3GEYJ562	CHIP 1/20W 5.6K	1	
R2042		ERJ3GEYJ683	CHIP 1/20W 68K	1	
R2043		ERJ3GEYJ221	CHIP 1/20W 220	1	
R2044		ERJ3GEYJ820	CHIP 1/20W 82	1	
R2045		ERJ8GCYK2R2		1	
R2046		ERJ8GCYK1R8		1	
R2047		ERJ8GCYK1R8		1	
R2048		ERJ3GEYJ153	CHIP 1/20W 15K	1	
R2049		ERJ3GEYJ103	CHIP 1/20W 10K	1	
R2050		ERJ3GEYJ103	CHIP 1/20W 10K	1	
R2051		ERJ3GEYJ103	CHIP 1/20W 10K	1	
R2053		ERJ3GEYJ682	CHIP 1/20W 6.8K	1	
R2054		ERJ3GEYJ682	CHIP 1/20W 6.8K	1	
R2060		ERJ3GEYJ334	CHIP 1/20W 330K	1	
R2062		ERJ3GEYJ102	CHIP 1/20W 1K	1	
R2064		ERDS2TJ101	C.RESISTOR 1/4W 100	1	
R2066		ERJ6GMYJ221		1	
R2067		ERJ6GMYJ150		1	
R2068		ERJ6GMYJ150		1	
R2069		ERJ6GMYJ150		1	
R2070		ERJ3GEYJ104	CHIP 1/20W 100K	1	
R2071		ERJ3GEYJ104	CHIP 1/20W 100K	1	
R2072		ERJ3GEYJ104	CHIP 1/20W 100K	1	
R2077		ERJ3GEYJ392	CHIP 1/20W 3.9K	1	
R2079		ERJ3GEYJ152	CHIP 1/20W 1.5K	1	
R2080		ERJ3GEYJ472	CHIP 1/20W 4.7K	1	
R2084		ERJ3GEYJ103	CHIP 1/20W 10K	1	
R2085		ERDS2TJ104	C.RESISTOR 1/4W 100K	1	
R3001		ERJ3GEYJ102	CHIP 1/20W 1K	1	
R3002		ERJ3GEYJ271	CHIP 1/20W 270	1	
R3003		ERJ3GEYJ563	CHIP 1/20W 56K	1	
R3004		ERJ3GEYJ473	CHIP 1/20W 47K	1	
R3008		ERJ3GEYJ102	CHIP 1/20W 1K	1	
R3013		ERJ3GEYJ331	CHIP 1/20W 330	1	
R3014		ERJ3GEYJ222	CHIP 1/20W 2.2K	1	
R3015		ERJ3GEYJ682	CHIP 1/20W 6.8K	1	
R3016		ERJ3GEYJ681	CHIP 1/20W 680	1	
R3017		ERJ3GEYJ560	CHIP 1/20W 56	1	
R3018		ERJ3GEYJ221	CHIP 1/20W 220	1	
R3020		ERJ3GEYJ103	CHIP 1/20W 10K	1	
R3021		ERJ3GEYJ103	CHIP 1/20W 10K	1	
R3022		ERJ3GEYJ270	CHIP 1/20W 27	1	
R3023		ERJ3GEYJ270	CHIP 1/20W 27	1	
R3024		ERJ3GEYJ680	CHIP 1/20W 68	1	
R3025		ERJ3GEYJ220	CHIP 1/20W 22	1	
R3026		ERJ3GEYJ821	CHIP 1/20W 820	1	
R3027		ERJ3GEYJ821	CHIP 1/20W 820	1	
R3028		ERJ3GEYJ152	CHIP 1/20W 1.5K	1	
R3029		ERJ3GEYJ681	CHIP 1/20W 680	1	
R3030		ERJ3GEYJ472	CHIP 1/20W 4.7K	1	
R3031		ERJ3GEYJ182	CHIP 1/20W 1.8K	1	
R3032		ERJ3GEYJ391	CHIP 1/20W 390	1	
R3033		ERJ3GEYJ102	CHIP 1/20W 1K	1	
R3036		ERJ3GEYJ102	CHIP 1/20W 1K	1	
R3039		ERJ3GEYJ472	CHIP 1/20W 4.7K	1	
R3040		ERJ3GEYJ472	CHIP 1/20W 4.7K	1	
R3041		ERJ3GEYJ102	CHIP 1/20W 1K	1	
R3042		ERJ3GEYJ332	CHIP 1/20W 3.3K	1	
R3043		ERJ3GEYJ472	CHIP 1/20W 4.7K	1	
R3044		ERJ3GEYJ472	CHIP 1/20W 4.7K	1	
R3045		ERJ3GEYJ104	CHIP 1/20W 100K	1	
R3046		ERJ3GEYJ103	CHIP 1/20W 10K	1	
R3047		ERJ3GEYJ103	CHIP 1/20W 10K	1	
R3048		ERJ3GEYJ474	CHIP 1/20W 470K	1	
R3049		ERJ3GEYJ394	CHIP 1/20W 390K	1	
R3050		ERJ3GEYJ821	CHIP 1/20W 820	1	
R3051		ERJ3GEYJ221	CHIP 1/20W 220	1	
R3054		ERJ3GEYJ222	CHIP 1/20W 2.2K	1	
R3055		ERJ3GEYJ562	CHIP 1/20W 5.6K	1	
R3056		ERJ3GEYJ103	CHIP 1/20W 10K	1	

To guarantee the FUNCTION,SAFETY and RELIABLITY of repaired units,only use ORIGINAL REPLACEMENT PARTS which are listed with their part numbers in this parts list section.

Ref.No.		Part No.	Part Name & Description	Pcs	Remarks
R3057		ERJ3GEYJ222	CHIP 1/20W 2.2K	1	
R3058		ERJ3GEYJ122	CHIP 1/20W 1.2K	1	
R3059		ERJ3GEYJ822	CHIP 1/20W 8.2K	1	
R3061		ERJ3GEYJ331	CHIP 1/20W 330	1	
R3063		ERJ3GEYJ102	CHIP 1/20W 1K	1	
R3067		ERJ3GEYJ182	CHIP 1/20W 1.8K	1	
R3068		ERJ3GEYJ562	CHIP 1/20W 5.6K	1	
R3076		ERJ3GEYJ222	CHIP 1/20W 2.2K	1	
R3078		ERJ3GEYJ152	CHIP 1/20W 1.5K	1	
R3079		ERJ3GEYJ152	CHIP 1/20W 1.5K	1	
R3082		ERJ3GEYJ182	CHIP 1/20W 1.8K	1	
R3087		ERJ3GEYJ391	CHIP 1/20W 390	1	
R3089		ERJ3GEYJ122	CHIP 1/20W 1.2K	1	
R3090		ERJ3GEYJ562	CHIP 1/20W 5.6K	1	
R3091		ERJ3GEYJ122	CHIP 1/20W 1.2K	1	
R3093		ERJ3GEYJ182	CHIP 1/20W 1.8K	1	
R3094		ERJ3GEYJ182	CHIP 1/20W 1.8K	1	
R3097		ERJ3GEYJ391	CHIP 1/20W 390	1	
R3109		ERJ3GEYJ472	CHIP 1/20W 4.7K	1	
R3120		ERJ3GEYJ103	CHIP 1/20W 10K	1	
R3121		ERJ3GEYJ151	CHIP 1/20W 150	1	
R3122		ERJ3GEYJ471	CHIP 1/20W 470	1	
R3124		ERJ3GEYJ222	CHIP 1/20W 2.2K	1	
R3125		ERJ3GEYJ121	CHIP 1/20W 120	1	
R3145		ERJ3GEYJ102	CHIP 1/20W 1K	1	
R3146		ERJ3GEYJ102	CHIP 1/20W 1K	1	
R3147		ERJ3GEYJ681	CHIP 1/20W 680	1	
R3148		ERJ3GEYJ102	CHIP 1/20W 1K	1	
R3154		ERJ3GEYJ223	CHIP 1/20W 22K	1	
R3155		ERJ3GEYJ332	CHIP 1/20W 3.3K	1	
R3501		ERJ3GEYJ393	CHIP 1/20W 39K	1	
R3502		ERJ3GEYJ822	CHIP 1/20W 8.2K	1	
R3503		ERJ3GEYJ391	CHIP 1/20W 390	1	
R3504		ERJ3GEYJ271	CHIP 1/20W 270	1	
R3505		ERJ3GEYJ4R7	CHIP 1/20W 4.7	1	
R3506		ERJ3GEYJ823	CHIP 1/20W 82K	1	
R4001		ERJ3GEYJ100	CHIP 1/20W 10	1	
R4002		ERJ3GEYJ223	CHIP 1/20W 22K	1	
R4003		ERJ3GEYJ103	CHIP 1/20W 10K	1	
R4004		ERJ3GEYJ183	CHIP 1/20W 18K	1	
R4005		ERJ3GEYJ151	CHIP 1/20W 150	1	
R4006		ERJ3GEYJ184	CHIP 1/20W 180K	1	
R4007		ERJ3GEYJ332	CHIP 1/20W 3.3K	1	
R4009		ERJ3GEYJ122	CHIP 1/20W 1.2K	1	
R4010		ERJ3GEYJ472	CHIP 1/20W 4.7K	1	
R4011		ERJ3GEYJ102	CHIP 1/20W 1K	1	
R4012		ERJ3GEYJ472	CHIP 1/20W 4.7K	1	
R4013		ERJ3GEYJ153	CHIP 1/20W 15K	1	
R4014		ERJ3GEYJ122	CHIP 1/20W 1.2K	1	
R4016		ERJ3GEYJ181	CHIP 1/20W 180	1	
R4018		ERJ3GEYJ105	CHIP 1/20W 1M	1	
R4025		ERJ3GEYJ273	CHIP 1/20W 27K	1	
R4026		ERJ3GEYJ333	CHIP 1/20W 33K	1	
R4027		ERJ3GEYJ561	CHIP 1/20W 560	1	
R4029		ERJ3GEYJ563	CHIP 1/20W 56K	1	
R4030		ERJ3GEYJ102	CHIP 1/20W 1K	1	
R4031		ERJ3GEYJ124	CHIP 1/20W 120K	1	
R4032		ERJ3GEYJ124	CHIP 1/20W 120K	1	
R4033		ERJ3GEYJ473	CHIP 1/20W 47K	1	
R4034		ERJ3GEYJ473	CHIP 1/20W 47K	1	
R4035		ERJ3GEYJ101	CHIP 1/20W 100	1	
R4036		ERJ3GEYJ154	CHIP 1/20W 150K	1	
R4037		ERJ3GEYJ273	CHIP 1/20W 27K	1	
R4038		ERJ3GEYJ223	CHIP 1/20W 22K	1	
R4039		ERJ3GEYJ273	CHIP 1/20W 27K	1	
R4040		ERJ3GEYJ681	CHIP 1/20W 680	1	
R4041		ERJ3GEYJ472	CHIP 1/20W 4.7K	1	
R4042		ERJ6GMYJ103		1	
R4044		ERJ3GEYJ104	CHIP 1/20W 100K	1	
R4045		ERJ3GEYJ224	CHIP 1/20W 220K	1	
R4046		ERJ3GEYJ473	CHIP 1/20W 47K	1	
R4047		ERJ3GEYJ563	CHIP 1/20W 56K	1	
R4048		ERJ3GEYJ104	CHIP 1/20W 100K	1	
R4049		ERJ3GEYJ103	CHIP 1/20W 10K	1	
R4050		ERJ3GEYJ122	CHIP 1/20W 1.2K	1	

Ref.No.		Part No.	Part Name & Description	Pcs	Remarks
R4051		ERJ3GEYJ122	CHIP 1/20W 1.2K	1	
R4052		ERJ3GEYJ272	CHIP 1/20W 2.7K	1	
R4053		ERJ3GEYJ272	CHIP 1/20W 2.7K	1	
R4054		ERJ3GEYJ153	CHIP 1/20W 15K	1	
R5001		ERJ3GEYJ152	CHIP 1/20W 1.5K	1	
R5002		ERJ3GEYJ102	CHIP 1/20W 1K	1	
R5003		ERJ3GEYJ272	CHIP 1/20W 2.7K	1	
R5004		ERJ3GEYJ332	CHIP 1/20W 3.3K	1	
R5005		ERJ3GEYJ103	CHIP 1/20W 10K	1	
R5006		ERJ3GEYJ332	CHIP 1/20W 3.3K	1	
R5007		ERJ3GEYJ332	CHIP 1/20W 3.3K	1	
R5008		ERJ3GEYJ152	CHIP 1/20W 1.5K	1	
R5009		ERJ3GEYJ102	CHIP 1/20W 1K	1	
R5010		ERJ3GEYJ272	CHIP 1/20W 2.7K	1	
R5011		ERJ3GEYJ332	CHIP 1/20W 3.3K	1	
R5012		ERJ3GEYJ103	CHIP 1/20W 10K	1	
R5013		ERJ3GEYJ332	CHIP 1/20W 3.3K	1	
R5014		ERJ3GEYJ332	CHIP 1/20W 3.3K	1	
R5015		ERJ3GEYJ152	CHIP 1/20W 1.5K	1	
R5016		ERJ6GMYJ102	CHIP 1/16W 1K	1	
R5017		ERJ3GEYJ272	CHIP 1/20W 2.7K	1	
R5018		ERJ3GEYJ332	CHIP 1/20W 3.3K	1	
R5019		ERJ3GEYJ103	CHIP 1/20W 10K	1	
R5020		ERJ3GEYJ332	CHIP 1/20W 3.3K	1	
R5021		ERJ3GEYJ332	CHIP 1/20W 3.3K	1	
R5022		ERJ3GEYJ152	CHIP 1/20W 1.5K	1	
R5023		ERJ6GMYJ102	CHIP 1/16W 1K	1	
R5024		ERJ3GEYJ272	CHIP 1/20W 2.7K	1	
R5025		ERJ3GEYJ332	CHIP 1/20W 3.3K	1	
R5026		ERJ3GEYJ103	CHIP 1/20W 10K	1	
R5027		ERJ3GEYJ332	CHIP 1/20W 3.3K	1	
R5028		ERJ3GEYJ332	CHIP 1/20W 3.3K	1	
R5029		ERJ3GEYJ103	CHIP 1/20W 10K	1	
R5030		ERJ3GEYJ152	CHIP 1/20W 1.5K	1	
R5031		ERJ3GEYJ152	CHIP 1/20W 1.5K	1	
R5032		ERJ3GEYJ152	CHIP 1/20W 1.5K	1	
R5033		ERJ3GEYJ152	CHIP 1/20W 1.5K	1	
R5034		ERJ3GEYJ103	CHIP 1/20W 10K	1	
R5035		ERJ3GEYJ681	CHIP 1/20W 680	1	
R5036		ERJ3GEYJ102	CHIP 1/20W 1K	1	
R5037		ERJ3GEYJ102	CHIP 1/20W 1K	1	
R5040		ERJ3GEYJ102	CHIP 1/20W 1K	1	
R5041		ERJ3GEYJ681	CHIP 1/20W 680	1	
R5042		ERJ3GEYJ152	CHIP 1/20W 1.5K	1	
R5043		ERJ3GEYJ102	CHIP 1/20W 1K	1	
R5044		ERJ3GEYJ121	CHIP 1/20W 120	1	
R5045		ERJ3GEYJ102	CHIP 1/20W 1K	1	
R5049		ERJ3GEYJ102	CHIP 1/20W 1K	1	
R5050		ERJ3GEYJ182	CHIP 1/20W 1.8K	1	
R5053		ERJ3GEYJ102	CHIP 1/20W 1K	1	
R5054		ERJ3GEYJ102	CHIP 1/20W 1K	1	
R5055		ERJ3GEYJ121	CHIP 1/20W 120	1	
R5056		ERJ3GEYJ471	CHIP 1/20W 470	1	
R5057		ERJ3GEYJ471	CHIP 1/20W 470	1	
R5058		ERJ3GEYJ471	CHIP 1/20W 470	1	
R5059		ERJ3GEYJ471	CHIP 1/20W 470	1	
R5063		ERJ3GEYJ100	CHIP 1/20W 10	1	
R6004		ERJ3GEYJ332	CHIP 1/20W 3.3K	1	
R6005		ERJ3GEYJ562	CHIP 1/20W 5.6K	1	
R6006		ERJ3GEYJ103	CHIP 1/20W 10K	1	
R6007		ERJ3GEYJ103	CHIP 1/20W 10K	1	
R6008		ERJ3GEYJ473	CHIP 1/20W 47K	1	
R6009		ERJ3GEYJ473	CHIP 1/20W 47K	1	
R6010		ERJ3GEYJ393	CHIP 1/20W 39K	1	
R6011		ERJ3GEYJ104	CHIP 1/20W 100K	1	
R6014		ERJ3GEYJ103	CHIP 1/20W 10K	1	
R6015		ERJ3GEYJ103	CHIP 1/20W 10K	1	
R6017		ERJ3GEYJ102	CHIP 1/20W 1K	1	
R6018		ERJ8GCYJ391		1	
R6019		ERJ8GCYJ391		1	
R6020		ERJ8GCYJ391		1	
R6021		ERJ8GCYJ391		1	
R6022		ERJ8GCYJ391		1	
R6023		ERJ6GMYJ391	CHIP 1/16W 390	1	
R6024		ERJ8GCYJ391		1	

To guarantee the FUNCTION,SAFETY and RELIABLITY of repaired units,only use ORIGINAL REPLACEMENT PARTS which are listed with their part numbers in this parts list section.

Ref.No.		Part No.	Part Name & Description	Pcs	Remarks
R6025		ERJ8GCYJ391		1	
R6026		ERJ3GEYJ473	CHIP 1/20W 47K	1	
R6027		ERJ3GEYJ104	CHIP 1/20W 100K	1	
R6028		ERJ3GEYJ102	CHIP 1/20W 1K	1	
R6029		ERJ3GEYJ184	CHIP 1/20W 180K	1	
R6030		ERJ3GEYJ474	CHIP 1/20W 470K	1	
R6031		ERJ3GEYJ104	CHIP 1/20W 100K	1	
R6032		ERJ3GEYJ223	CHIP 1/20W 22K	1	
R6033		ERJ3GEYJ223	CHIP 1/20W 22K	1	
R6034		ERJ3GEYJ563	CHIP 1/20W 56K	1	
R6035		ERJ3GEYJ273	CHIP 1/20W 27K	1	
R6036		ERJ3GEYJ564	CHIP 1/20W 560K	1	
R6037		ERJ3GEYJ104	CHIP 1/20W 100K	1	
R6038		ERJ3GEYJ123	CHIP 1/20W 12K	1	
R6039		ERJ3GEYJ334	CHIP 1/20W 330K	1	
R6040		ERJ3GEYJ102	CHIP 1/20W 1K	1	
R6041		ERJ3GEYJ473	CHIP 1/20W 47K	1	
R6042		ERJ8GCYJ391		1	
R6043		ERJ3GEYJ103	CHIP 1/20W 10K	1	
R6044		ERJ8GCYJ391		1	
R6045		ERJ3GEYJ102	CHIP 1/20W 1K	1	
R6046		ERJ3GEYJ563	CHIP 1/20W 56K	1	
R6047		ERJ3GEYJ102	CHIP 1/20W 1K	1	
R6048		ERJ3GEYJ184	CHIP 1/20W 180K	1	
R6049		ERJ3GEYJ102	CHIP 1/20W 1K	1	
R6050		ERJ3GEYJ184	CHIP 1/20W 180K	1	
R6051		ERJ3GEYJ473	CHIP 1/20W 47K	1	
R6053		ERJ3GEYJ472	CHIP 1/20W 4.7K	1	
R6054		ERJ3GEYJ562	CHIP 1/20W 5.6K	1	
R6055		ERJ3GEYJ562	CHIP 1/20W 5.6K	1	
R6056		ERJ8GCYJ221	CHIP 1/8W 220	1	
R6057		ERJ8GCYJ221	CHIP 1/8W 220	1	
R6058		ERJ3GEYJ103	CHIP 1/20W 10K	1	
R6059		ERJ3GEYJ224	CHIP 1/20W 220K	1	
R6060		ERJ3GEYJ224	CHIP 1/20W 220K	1	
R6061		ERJ3GEYJ393	CHIP 1/20W 39K	1	
R6062		ERJ3GEYJ822	CHIP 1/20W 8.2K	1	
R6063		ERJ3GEYJ102	CHIP 1/20W 1K	1	
R6064		ERJ3GEYJ223	CHIP 1/20W 22K	1	
R6066		ERJ3GEYJ103	CHIP 1/20W 10K	1	
R6067		ERJ3GEYJ103	CHIP 1/20W 10K	1	
R6068		ERJ3GEYJ473	CHIP 1/20W 47K	1	
R6069		ERJ3GEYJ222	CHIP 1/20W 2.2K	1	
R6070		ERJ3GEYJ473	CHIP 1/20W 47K	1	
R6071		ERJ3GEYJ472	CHIP 1/20W 4.7K	1	
R6072		ERJ3GEYJ184	CHIP 1/20W 180K	1	
R6073		ERJ3GEYJ103	CHIP 1/20W 10K	1	
R6074		ERJ3GEYJ103	CHIP 1/20W 10K	1	
R6077		ERJ3GEYJ152	CHIP 1/20W 1.5K	1	
R6079		ERJ3GEYJ473	CHIP 1/20W 47K	1	
R6082		ERJ3GEYJ102	CHIP 1/20W 1K	1	
R6084		ERDS2TJ473	C.RESISTOR 1/4W 47K	1	
R8002		ERJ3GEYJ681	CHIP 1/20W 680	1	
R8003		ERJ3GEYJ122	CHIP 1/20W 1.2K	1	
R8004		ERJ3GEYJ271	CHIP 1/20W 270	1	
R8005		ERJ3GEYJ183	CHIP 1/20W 18K	1	
R8006		ERJ3GEYJ182	CHIP 1/20W 1.8K	1	
R8007		ERJ3GEYJ822	CHIP 1/20W 8.2K	1	
R8008		ERJ3GEYJ102	CHIP 1/20W 1K	1	
R8009		ERJ3GEYJ222	CHIP 1/20W 2.2K	1	
R8011		ERJ3GEYJ102	CHIP 1/20W 1K	1	
R8012		ERJ3GEYJ102	CHIP 1/20W 1K	1	
R8013		ERJ3GEYJ102	CHIP 1/20W 1K	1	
R8014		ERJ3GEYJ333	CHIP 1/20W 33K	1	
R8015		ERJ3GEYJ682	CHIP 1/20W 6.8K	1	
R8016		ERJ3GEYJ102	CHIP 1/20W 1K	1	
R8017		ERJ3GEYJ102	CHIP 1/20W 1K	1	
R8018		ERJ3GEYJ390	CHIP 1/20W 39	1	
R8019		ERJ3GEYJ331	CHIP 1/20W 330	1	
R8020		ERJ3GEYJ821	CHIP 1/20W 820	1	
R8021		ERJ3GEYJ822	CHIP 1/20W 8.2K	1	
R8022		ERJ3GEYJ223	CHIP 1/20W 22K	1	
R8023		ERJ3GEYJ102	CHIP 1/20W 1K	1	
R8024		ERJ3GEYJ562	CHIP 1/20W 5.6K	1	
R8025		ERJ3GEYJ102	CHIP 1/20W 1K	1	

Ref.No.		Part No.	Part Name & Description	Pcs	Remarks
R8026		ERJ3GEYJ102	CHIP 1/20W 1K	1	
R8027		ERJ3GEYJ182	CHIP 1/20W 1.8K	1	
R8028		ERJ3GEYJ272	CHIP 1/20W 2.7K	1	
R8029		ERJ3GEYJ562	CHIP 1/20W 5.6K	1	
R8030		ERJ8GCYJ470	CHIP 1/8W 47	1	
R8031		ERJ3GEYJ103	CHIP 1/20W 10K	1	
R8032		ERJ3GEYJ273	CHIP 1/20W 27K	1	
R8033		ERJ3GEYJ472	CHIP 1/20W 4.7K	1	
R8034		ERJ3GEYJ821	CHIP 1/20W 820	1	
R8035		ERJ3GEYJ272	CHIP 1/20W 2.7K	1	
R8036		ERJ3GEYJ223	CHIP 1/20W 22K	1	
R8037		ERJ3GEYJ183	CHIP 1/20W 18K	1	
R8038		ERJ3GEYJ822	CHIP 1/20W 8.2K	1	
R8040		ERJ3GEYJ822	CHIP 1/20W 8.2K	1	
R8041		ERJ3GEYJ104	CHIP 1/20W 100K	1	
R8042		ERJ3GEYJ123	CHIP 1/20W 12K	1	
R8043		ERJ3GEYJ104	CHIP 1/20W 100K	1	
R8046		ERJ3GEYJ123	CHIP 1/20W 12K	1	
R8047		ERJ3GEYJ562	CHIP 1/20W 5.6K	1	
R8048		ERJ3GEYJ105	CHIP 1/20W 1M	1	
R8054		ERJ3GEYJ472	CHIP 1/20W 4.7K	1	
R8055		ERJ3GEYJ102	CHIP 1/20W 1K	1	
R8056		ERJ3GEYJ102	CHIP 1/20W 1K	1	
R8060		ERJ3GEYJ681	CHIP 1/20W 680	1	
R8061		ERJ3GEYJ471	CHIP 1/20W 470	1	
R8062		ERJ3GEYJ101	CHIP 1/20W 100	1	
R8063		ERJ3GEYJ102	CHIP 1/20W 1K	1	
R8064		ERJ3GEYJ103	CHIP 1/20W 10K	1	
R8065		ERJ3GEYJ123	CHIP 1/20W 12K	1	
R8066		ERJ3GEYJ563	CHIP 1/20W 56K	1	
R8067		ERJ3GEYJ563	CHIP 1/20W 56K	1	
S6001		ESD142127		1	
T1001		ELL10R007		1	
T4001		EIQ7QE005Q	TRANSFORMER	1	
VR1001		EVM7NSW00B53		1	
VR1002		EVM7NSX00B53		1	
VR1003		EVM7NSW00B53		1	
VR2001		EVM7NSW00B15		1	
VR3001		EVM7NSX00B54		1	
VR3002		EVM7NSX00B54		1	
VR3003		EVM7NSX00B54		1	
VR3004		EVM7NSX00B14		1	
VR3005		EVM7NSX00B14		1	
VR3006		EVM7NSX00B23		1	
VR3007		EVM7NSX00B54		1	
VR3012		EVM7NSX00B23		1	
VR4001		EVM7NSX00B23		1	
VR5001		EVM7NSX00B13		1	
VR6001		EVM7NSX00B23		1	
VR6002		EVM7NSX00B14		1	
VR8001		EVM7NSX00B13		1	
VR8002		EVM7NSX00B54		1	
X1001		VSX0136	CRYSTAL OSCILLATOR	1	
X2001		VSX0154	CRYSTAL OSCILLATOR	1	
X6001		VSX0140	CRYSTAL OSCILLATOR	1	
X6002		VSX0249		1	
X8001		VSX0132	CRYSTAL OSCILLATOR	1	
			MISELLANEOUS		
		VSC2181	H.A SHIELD CASE (MAIN)	1	
		VSC2180	H.A SHIELD CASE (BOTTOM)	1	

To guarantee the FUNCTION,SAFETY and RELIABLITY of repaired units,only use ORIGINAL REPLACEMENT PARTS which are listed with their part numbers in this parts list section.

Ref.No.		Part No.	Part Name & Description	Pcs	Remarks
		VSC1932	SHIELD CASE	1	
		VSC1358	POWER SHIELD CASE	1	
		VMZ0651	POWER SHIELD BARRIER	1	
	■	VEP06452A	OPERATION C.B.A.		
D6501		BR3668S		1	
D6502		BR3668S		1	
D6503		BR3668S		1	
D6504		BR3668S		1	
D6505		BR3668S		1	
D6506		BR3668S		1	
D6507		BR3668S		1	
D6508		MA165	DIODE	1	OR 1SS119, 1SS254
D6509		MA165	DIODE	1	OR 1SS119, 1SS254
D6510		MA165	DIODE	1	OR 1SS119, 1SS254
D6511		MA165	DIODE	1	OR 1SS119, 1SS254
D6512		MA165	DIODE	1	OR 1SS119, 1SS254
D6513		MA165	DIODE	1	OR 1SS119, 1SS254
D6514		MA165	DIODE	1	OR 1SS119, 1SS254
D6515		MA165	DIODE	1	OR 1SS119, 1SS254
D6516		MA165	DIODE	1	OR 1SS119, 1SS254
D6517		MA165	DIODE	1	OR 1SS119, 1SS254
D6518		MA165	DIODE	1	OR 1SS119, 1SS254
D6519		MA165	DIODE	1	OR 1SS119, 1SS254
P6501		VJP1606T	CONNECTOR(MALE)	1	
P6502		VJP2107	CONNECTOR	1	
S6501		ESD100121		1	
S6502		EVQQSB04B	SWITCH	1	
S6503		EVQQSB04B	SWITCH	1	
S6504		EVQQSB04B	SWITCH	1	
S6505		EVQQSB04B	SWITCH	1	
S6506		EVQQSB04B	SWITCH	1	
S6507		EVQQSB04B	SWITCH	1	
S6508		EVQQSB04B	SWITCH	1	
S6509		EVQQSB04B	SWITCH	1	
S6510		EVQQSB04B	SWITCH	1	
S6511		EVQQSB04B	SWITCH	1	
S6512		EVQQSB04B	SWITCH	1	
S6513		EVQQSB04B	SWITCH	1	
S6514		VST0098		1	
S6515		EVQQSB04B	SWITCH	1	
S6516		EVQQSB04B	SWITCH	1	
	■	VEP00K79A	CAMERA OPERATION (I) C.B.A.		
			CAPACITORS		
C001		ECEA0JKS101	E.CAPACITOR 6.3V 100U	1	
C002		ECEA0JKS101	E.CAPACITOR 6.3V 100U	1	
D001		MA165	DIODE	1	
D002		MA165	DIODE	1	
D003		MA165	DIODE	1	
D004		MA165	DIODE	1	
D005		MA165	DIODE	1	

Ref.No.		Part No.	Part Name & Description	Pcs	Remarks
D006		BR3668S		1	
P001		VJP1612T	CONNECTOR(MALE)	1	
P002		VJP1613T	CONNECTOR	1	
P003		VJP1606T	CONNECTOR(MALE)	1	
			RESISTORS		
R001		ERDS2TJ562	C.RESISTOR 1/4W 5.6K	1	
R002		ERDS2TJ563	C.RESISTOR 1/4W 56K	1	
R003		ERDS2TJ563	C.RESISTOR 1/4W 56K	1	
R004		ERDS2TJ102	C.RESISTOR 1/4W 1K	1	
R005		ERDS2TJ102	C.RESISTOR 1/4W 1K	1	
SW001		EVQQSU04W	SWITCH	1	
SW002		EVQQSU04W	SWITCH	1	
SW003		VSS0170	SWITCH	1	
SW004		EVQQSU04W	SWITCH	1	
SW005		EVQQSU04W	SWITCH	1	
SW006		VSS0126	SWITCH	1	
SW007		EVQQSU04W	SWITCH	1	
	■	VEK3522	CAMERA OPERATION (II)		
SW008		EVQQSU04W	SWITCH	1	
SW009		EVQQSU04W	SWITCH	1	
	■	VES0143	MECHANISM CONNECTION		
			MISELLANEOUS		
		ON2170	TRANSISTOR	1	
		VMX1280	SENSOR SPACER	1	
		VSS0193	MODE SW	1	
		VJP1235T	8P CONNECTOR	1	
		VJP1229R	2P CONNECTOR	1	
	■	VEK3415	SUPPLY PHOTO C.B.A.		
			MISELLANEOUS		
		PN158NVNC	PHOTO TR.	1	
		VMD0607	PHOTO HOLDER	1	
		VSH0026	SUPPLY LEAF SW	1	
	■	VEK3414	TAKE UP PHOTO C.B.A.		
			MISELLANEOUS		
		PN158NV	PHOTO TR.	1	
		VMD0606	PHOTO HOLDER	1	

To guarantee the FUNCTION,SAFETY and RELIABLITY of repaired units,only use ORIGINAL REPLACEMENT PARTS which are listed with their part numbers in this parts list section.

Ref.No.		Part No.	Part Name & Description	Pcs	Remarks
	■	VEK3622	ZOOM SWITCH C.B.A.		
P1507		VJP1607T	CONNECTOR(MALE)	1	
	■	VEK3623	START/STOP C.B.A.		
			MISELLANEOUS		
		EVQQSU04W	SWITCH	1	
	■	VEK3624	SUB START/STOP C.B.A.		
			MISELLANEOUS		
		EVQQSU04W	SWITCH	1	
	■	VEP00H73B	FE HEAD C.B.A.		
C1501		ECEA1CKS100	E.CAPACITOR 16V 100U	1	
C1502		ECKZ1H472ZF	C.CAPACITOR 50V 4700P	1	
C1503		VCYE1C103MR1	S.CAPACITOR 16V 0.01U	1	
L1501		VLQEL05F221K	COIL 220UH	1	
Q1504		2SC2603	TRANSISTOR	1	
R1503		ERDS2TJ333	C.RESISTOR 1/4W 33K	1	
T1501		EIQ7QT007Q	TRANSFORMER	1	
	■	VEK3521	E.V.F. CONNECTOR C.B.A.		
J1504		VJJ0163	CONNECTOR	1	
P1505		VJP1613T	CONNECTOR	1	

Ref.No.		Part No.	Part Name & Description	Pcs	Remarks
	■	VEK3621	14P REMOTE CONTROL C.B.A.		NV-M7E/EG/B
			MISELLANEOUS		
		VJJ0125	REMOCON JACK	1	
		VEE4074	14P MULTI CONNECTOR	1	
	■	VEK3413	14P REMOTE CONTROL C.B.A.		NV-M7EO/EN/EM/EA/A/AM
			MISELLANEOUS		
		VJJ0125	REMOCON JACK	1	
		VEE3753	14P MULTI CONNECTOR	1	

To guarantee the FUNCTION,SAFETY and RELIABLITY of repaired units,only use ORIGINAL REPLACEMENT PARTS which are listed with their part numbers in this parts list section.

3.VW-AM7E/B/EN/A/EA/EM/ BA Mechanical Replacement Parts List

Note:1.* Be sure to make your orders of replacement parts according to this list.
2.IMPORTANT SAFETY NOTICE
Components identified with the mark <!> have the special characteristics for safety. When replacing any of these components,use only the same type.

Ref.No.		Part No.	Part Name & Description	Pcs	Remarks
1(1)		VKM1112	TOP CASE	1	
2(1)		VYP2011	FRONT PANEL UNIT	1	VW-AM7 E/B/A/EA
2(1)		VYP2012	FRONT PANEL UNIT	1	VW-AM7 EN/EM/BA
3(1)		VKM1251	SIDE CASE	1	
4(1)		VKM1111	REAR CASE	1	
5(1)		VGU2144	OPERATE/TV SWITCH KNOB	2	
6(1)		VGH0573	A-V TERMINAL NAME PLATE	1	
7(1)		VGH1410	REAR PANEL NAME PLATE	1	VW-AM7 E/B/EM/BA
7(1)		VGH1412	REAR PANEL NAME PLATE	1	VW-AM7 EA
7(1)		VGH1413	REAR PANEL NAME PLATE	1	VW-AM7 EN
7(1)		VGH1411	REAR PANEL NAME PLATE	1	VW-AM7 A
8(1)		VJA0481	AC CORD	1	VW-AM7 E/EN
8(1)		VJA0480	AC CORD	1	VW-AM7 B/BA
8(1)		VJA0448	AC CORD	1	VW-AM7 A/EA
8(1)		VJA0460	AC CORD	1	VW-AM7 EM
9(1)		VJA0465	DC OUTPUT CORD	1	
10(1)		VMP1168	AC-DC CORD ANGLE	1	
11(1)		VMP1010	A-V TERMINAL ANGLE	1	
12(1)		VSC1669	MAIN SHIELD CASE	1	
13(1)		VMZ1126	INSULATION BARRIER (A)	1	
14(1)		VMZ1127	INSULATION BARRIER (B)	1	
15(1)		VJF0107	BUSHING	1	VW-AM7 E/EM/EN/A/EA
15(1)		VJF0206	BUSHING	1	VW-AM7 B/BA
16(1)		ESD39317S	ALL OFF SWITCH	1	
17(1)		VMZ0580	SWITCH COVER	1	
18(1)		VMZ1128	REAR INSULATION PLATE (A)	1	
19(1)		VMZ1129	REAR INSULATION PLATE (B)	1	
20(1)		VMP1169	RF CONVERTER SUPPORT ANGLE	1	
21(1)		VMP0816	FRONT PANEL SUPPORT ANGLE	1	
22(1)		VMP0686	A-V TERMINAL SUPPORT ANGLE	1	
23(1)		VGF0163	RUBBER CAP	1	VW-AM7 E/EN/B/BA
30(2)		VPG3572	PACKING CASE	1	VW-AM7 A
30(2)		VPG3573	PACKING CASE	1	VW-AM7 BA
31(2)		VPN1297	CUSHION (TOP)	1	
32(2)		VPN1298	CUSHION (BOTTOM)	1	
33(2)		VJA0321	DIN-RF CABLE	1	
34(2)		VJA0180	BATTERY CATCHER	1	
35(2)		VQT2380	OPERATION INSTRUCTIONS	1	VW-AM7 A
35(2)		VQT2381	OPERATION INSTRUCTIONS	1	VW-AM7 BA

Ref.No.		Part No.	Part Name & Description	Pcs	Remarks

To guarantee the FUNCTION,SAFETY and RELIABLITY of repaired units,only use ORIGINAL REPLACEMENT PARTS which are listed with their part numbers in this parts list section.

4.VW-AM7E/B/EN/A/EA/EM/BA Electrical Replacement Parts List

Note:1.* Be sure to make your orders of replacement parts according to this list.
2.IMPORTANT SAFETY NOTICE
Components identified with the mark <!> have the special characteristics for safety. When replacing any of these components,use only the same type.
3.Unless otherwise specified,
All resistors are in OHMS ,K=1,000 OHMS. All capacitors are in MICRO-FARADS(uf),P=uuF.
4.The P.C.Board units marked width'■'show below the main assembled parts.
5.Printed circuit board assembly with mark(NLA) is no longer available after discontinuation of the product.

Ref.No.		Part No.	Part Name & Description	Pcs	Remarks
		VEP61013A	MAIN C.B.A	1	
		VEP60052A	FRONT PANNEL C.B.A.	1	
		VEP60054A	A-V TERMINAL C.B.A.	1	
		ENC47956	RF CONVERTER	1	VW-AM7 E/EM
		ENC47957	RF CONVERTER	1	VW-AM7 B/BA
		ENC47901	RF CONVERTER	1	VW-AM7 EN/EA
		ENC47902	RF CONVERTER	1	VW-AM7 A
	■	VEP61013A	MAIN C.B.A.		
			CAPACITORS		
C001		ECQU2A224MN	P.CAPACITOR 100V 0.22U	1	
C002		ECQU2A473MN	P.CAPACITOR 250V 0.047U	1	
C006		VCK0046	C.CAPACITOR 1000P	1	
C007		VCK0046	C.CAPACITOR 1000P	1	
C008		VCK0046	C.CAPACITOR 1000P	1	
C009		VCK0046	C.CAPACITOR 1000P	1	
C010		ECES2GG820K	E.CAPACITOR 400V 82U	1	
C011		ECQE2104KF	P.CAPACITOR 0.1U	1	
C012		ECEA1VGE101	E.CAPACITOR 35V 100U	1	
C013		ECEA1VGE220	E.CAPACITOR 35V 22U	1	
C014		ECEA1CGE330	E.CAPACITOR 16V 33U	1	
C015		ECQV1H104JZ	P.CAPACITOR 50V 0.1U	1	
C016		VCK0062	C.CAPACITOR	1	
C018		ECKD3A101KB	C.CAPACITOR 1KV 100U	1	
C101		ECEA1EF102	E.CAPACITOR 25V 1000U	1	
C102		ECEA1EGE471	E.CAPACITOR 25V 470U	1	
C103		ECEA1VGE101	E.CAPACITOR 35V 100U	1	
C104		ECEA1VGE100	E.CAPACITOR 35V 10U	1	
C105		ECEA1HU010	E.CAPACITOR 50V 1U	1	
C106		ECEA1EU100	E.CAPACITOR 25V 10U	1	
C107		ECEA1EN4R7SB	E.CAPACITOR 25V 4.7U	1	
C108		ECEA1EGE470	E.CAPACITOR 25V 47U	1	
C109		ECEA1EGE470	E.CAPACITOR 25V 47U	1	
C110		ECEA1CM102	E.CAPACITOR 16V 1000U	1	
C111		ECEA1CU330	E.CAPACITOR 16V 33U	1	
C112		ECQV1H224JZ	P.CAPACITOR 50V 0.22U	1	
C113		ECQV1H104JZ	P.CAPACITOR 50V 0.1U	1	
C114		ECEA1EGE221	E.CAPACITOR 25V 220U	1	
C115		ECQV1H104JZ	P.CAPACITOR 50V 0.1U	1	
C116		ECEA1EGE100	E.CAPACITOR 25V 10U	1	
C117		ECKD2H221KB	C.CAPACITOR 500V 220U	1	
D001		S1WBA60S	DIODE	1	
D002		ERA22-08	DIODE	1	
D003		ERA82-004	DIODE	1	
D004		MA165	DIODE	1	
D005		VSD0001	DIODE	1	

Ref.No.		Part No.	Part Name & Description	Pcs	Remarks
D006		RMPG06GPKG3	DIODE	1	
D007		MA4270H	DIODE	1	
D008		ERA82-004	DIODE	1	
D101		FML12S	DIODE	1	
D102		RMPG06GPKG3	DIODE	1	
D103		SB340-5013L	DIODE	1	
D107		RD8.2JS-T1	DIODE	1	
D108		OA95A	LED	1	
D109		MA165	DIODE	1	
D110		MA165	DIODE	1	
D111		OA95A	LED	1	
D112		MA4056M	DIODE	1	
D113		MA165	DIODE	1	
D114		MA4100L	DIODE	1	
F001		XBA2C10TB0	FUSE	1	
IC1		VCR0189	IC	1	
IC101		VCR0190	IC	1	
IC102		UPC78M12H	IC	1	
L001		VLF0615	COIL	1	
L002		VLF0616	COIL	1	
L3		VLP0064	COIL	1	
L4		VLP0064	COIL	1	
L101		VLQ0098	COIL	1	
L102		VLQEL06R470	COIL	1	
L103		VLP0064	COIL	1	
P6		VJP1143	CONNECTOR(MALE)	1	
PHC1		PC111A	PHOTO COUPLER	1	
Q001		2SK796	TRANSISTOR	1	
Q101		2SB953	TRANSISTOR	1	
Q102		2SD638	TRANSISTOR	1	
Q103		2SD636	TRANSISTOR	1	
			RESISTORS		
R001		ERDS2TJ114	C.RESISTOR 1/4W 110K	1	
R002		ERDS2TJ114	C.RESISTOR 1/4W 110K	1	
R003		ERDS2TJ114	C.RESISTOR 1/4W 110K	1	
R004		ERDS2TJ114	C.RESISTOR 1/4W 110K	1	
R005		ERG2SJ104	M.RESISTOR 2W 100K	1	
R006		ERX1SJR27	M.RESISTOR 1W 0.27	1	
R007		ERDS2TJ271	C.RESISTOR 1/4W 270	1	
R008		ERDS2TJ680	C.RESISTOR 1/4W 68	1	
R009		ERDS2TJ563	C.RESISTOR 1/4W 56K	1	
R010		ERDS2TJ183	C.RESISTOR 1/4W 18K	1	
R011		ERDS2TJ562	C.RESISTOR 1/4W 5.6K	1	
R012		ERDS2TJ101	C.RESISTOR 1/4W 100	1	
R013		ERC12GJ334	S.RESISTOR 1/2W 330K	1	
R015		ERDS2TJ120	C.RESISTOR 1/4W 12	1	
R016		ERDS2TJ220	C.RESISTOR 1/4W 22	1	
R101		ERF2AKR22	W.RESISTOR 2W 0.22	1	
R102		ERDS2TJ222	C.RESISTOR 1/4W 2.2K	1	
R103		ERG2ANJ221	M.RESISTOR 2W 220	1	
R105		ERX1SJU1R0	M.RESISTOR 1W 1	1	
R106		ERX1SJU1R0	M.RESISTOR 1W 1	1	
R107		ERX1SJU1R0	M.RESISTOR 1W 1	1	
R108		ERX1SJU1R0	M.RESISTOR 1W 1	1	

To guarantee the FUNCTION,SAFETY and RELIABLITY of repaired units,only use ORIGINAL REPLACEMENT PARTS which are listed with their part numbers in this parts list section.

Ref.No.		Part No.	Part Name & Description	Pcs	Remarks
R109		ERDS2TJ223	C.RESISTOR 1/4W 22K	1	
R110		ERDS2TJ104	C.RESISTOR 1/4W 100K	1	
R111		ERDS2TJ183	C.RESISTOR 1/4W 18K	1	
R112		ERDS2TJ105	C.RESISTOR 1/4W 1000K	1	
R113		ERDS2TJ272	C.RESISTOR 1/4W 2.7K	1	
R114		ERDS2TJ223	C.RESISTOR 1/4W 22K	1	
R115		ERDS2TJ183	C.RESISTOR 1/4W 18K	1	
R116		ERDS2TJ822	C.RESISTOR 1/4W 8.2K	1	
R117		ERDS2TJ821	C.RESISTOR 1/4W 820	1	
R118		ERDS2TJ682	C.RESISTOR 1/4W 6.8K	1	
R119		ERDS2TJ821	C.RESISTOR 1/4W 820	1	
R120		ERDS2TJ682	C.RESISTOR 1/4W 6.8K	1	
R121		ERDS2TJ222	C.RESISTOR 1/4W 2.2K	1	
R122		ERDS2TJ183	C.RESISTOR 1/4W 18K	1	
R123		ERDS2TJ271	C.RESISTOR 1/4W 270	1	
R124		ERDS2TJ681	C.RESISTOR 1/4W 680	1	
R125		ERG3SJ561	M.RESISTOR 3W 560	1	
R126		ERDS2TJ103	C.RESISTOR 1/4W 10K	1	
R128		ERDS2TJ103	C.RESISTOR 1/4W 10K	1	
T001		VLT0523	TRANSFORMER	1	
TH101		ERTD2ZHL332S	THERMISTOR 3.3K	1	S
TH102		ERTD2ZIL154S	THERMISTOR 150K	1	S
TH103		ERTD2ZHL153S	THERMISTOR 15K	1	S
VR101		EVN3ACA00B53	V.RESISTOR 5K	1	
VR102		EVN3ACA00B24	V.RESISTOR 20K	1	
VR103		EVN3ACA00B53	V.RESISTOR 5K	1	
ZNR1		ENB461D-05A	SURGE ABSORBER 460V	1	
			MISELLANEOUS		
		VJC6320	FUSE HOLDER	2	
		VMZ0429	FUSE COVER	1	
		VMZ0193	FUSE COVER	4	
		VMZ0997	TUBE FOR AC CORD	1	
		VMZ1104	INSULATING SHEET	1	
		VSC2215	HEAT SINK (A)	1	
		VSC2216	HEAT SINK (B)	1	
		VSC2227	HEAT SINK (C)	1	
	■	VEP60052A	FRONT PANNEL C.B.A.		
D301		LN21RCPHLM	LED	1	
D302		LN21RCPHLM	LED	1	
D303		D3S4M	DIODE	1	
			RESISTORS		
R301		ERDS2TJ222	C.RESISTOR 1/4W 2.2K	1	
R302		ERDS2TJ122	C.RESISTOR 1/4W 1.2K	1	
R303		ERDS2TJ102	C.RESISTOR 1/4W 1K	1	
SW301		ESD27170	SWITCH	1	

Ref.No.		Part No.	Part Name & Description	Pcs	Remarks
SW302		ESD27170	SWITCH	1	
			MISELLANEOUS		
		KL-04	LED SPACER	1	
		VJJ0128	EXT BATTERY TERMINAL	1	
	■	VEP60054A	A-V TERMINAL C.B.A.		
			CAPACITORS		
C201		ECEA0JK470	E.CAPACITOR 6.3V 47U	1	
C202		ECKF1H561KB	C.CAPACITOR 50V 560P	1	
C203		ECEA0JU102	E.CAPACITOR 6.3V 1000U	1	
C204		ECEA1CSS221	E.CAPACITOR 16V 220U	1	
C206		ECEA0JU470	E.CAPACITOR 6.3V 47U	1	
L201		VLF0413	FILTER	1	
Q201		2SB641	TRANSISTOR	1	
Q202		2SC2206	TRANSISTOR	1	
			RESISTORS		
R201		ERDS2TJ333	C.RESISTOR 1/4W 33K	1	
R202		ERDS2TJ123	C.RESISTOR 1/4W 12K	1	
R203		ERDS2TJ561	C.RESISTOR 1/4W 560	1	
R204		ERDS2TJ680	C.RESISTOR 1/4W 68	1	
R205		ERDS2TJ102	C.RESISTOR 1/4W 1K	1	
R206		ERDS2TJ392	C.RESISTOR 1/4W 3.9K	1	
R207		ERDS2TJ152	C.RESISTOR 1/4W 1.5K	1	

To guarantee the FUNCTION,SAFETY and RELIABLITY of repaired units,only use ORIGINAL REPLACEMENT PARTS which are listed with their part numbers in this parts list section.

AC Adaptor

VW-AM7 E/BA B/EA EN/A EM

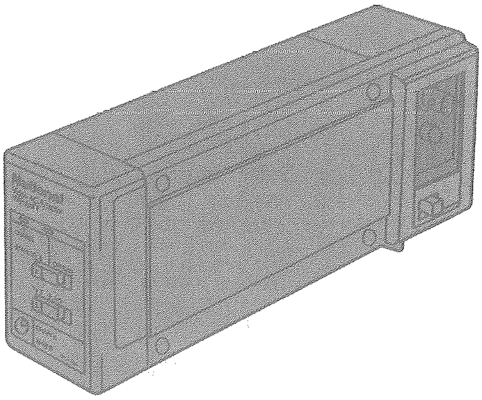

ITEM	SPECIFICATION	ITEM	SPECIFICATION
POWER	SOURCE: 100~240 V AC 50/60 Hz (Automatic Voltage Adjustment)	RF OUT SYSTEM	VHF: CH3/4, 76±3 dBμ, 75Ω unbalanced PAL B (VW-AM7EN/EA) UHF: CH36±4, 70^{+2}_{-3} dBμ, 75Ω unbalanced PAL G (VW-AM7E/EM) VHF: CH0/1, 76±3 dBμ, 75Ω unbalanced PAL B (VW-AM7A) UHF: CH36±4, 73±3 dBμ, 75Ω unbalanced PAL I (VW-AM7B/BA)
	CONSUMPTION: 44 watts		
	OUTPUT: DC 12 V, 1.2 A for VHS Movie DC 20 V, 0.1 A for Heater DC 12 V, 1.5 A for battery charge		
VIDEO	OUTPUT: VIDEO OUT CONNECTOR (BNC) 1.0 Vp-p, 75Ω terminated	DIMENSIONS	63(W)×84(H)×220(D) mm
AUDIO	OUTPUT: AUDIO OUT CONNECTOR (Phone Type) −8 dB, less than 2 kΩ	WEIGHT	0.86 kg

Weight and dimensions shown are approximate.
Specifications are subject to change without notice.

CAUTION: FOR USE WITH VHS VIDEO MOVIE, MODEL NV-M7.
WARNING: TO PREVENT FIRE OR SHOCK HAZARD, DO NOT EXPOSE THIS EQUIPMENT TO RAIN OR MOISTURE.

CONTENTS

1. CONTROLS AND COMPONENTS 1
2. DISASSEMBLY METHOD 1
3. ELECTRICAL ADJUSTMENT PROCEDURES 2
4. AC ADAPTOR BLOCK DIAGRAM 4
5. AC ADAPTOR SCHEMATIC DIAGRAM 6
6. MAIN C.B.A. (VEP61013A), FRONT PANEL C.B.A. (VEP60054A) &
   A-V TERMINAL C.B.A. (VEP60052A) 9
7. RF CONVERTER SCHEMATIC DIAGRAM (VW-AM7E/EM) 10
8. RF CONVERTER C.B.A. (ENC47956: VW-AM7E/EM) 10
9. RF CONVERTER SCHEMATIC DIAGRAM (VW-AM7B/BA) 11
10. RF CONVERTER C.B.A. (ENC47957: VW-AM7B/BA) 11
11. RF CONVERTER SCHEMATIC DIAGRAM (VW-AM7EN/EA) 12
12. RF CONVERTER C.B.A. (ENC47901: VW-AW7EN/EM) 12
13. RF CONVERTER SCHEMATIC DIAGRAM (VW-AM7A) 13
14. RF CONVERTER C.B.A. (ENC47902: VW-AM7A) 13
15. EXPLODED VIEWS 14
    1. CHASSIS & FRAME SECTION 14
    2. PACKING PARTS SECTION (VW-AM7A/BA) 15

1. CONTROLS AND COMPONENTS

FRONT SIDE

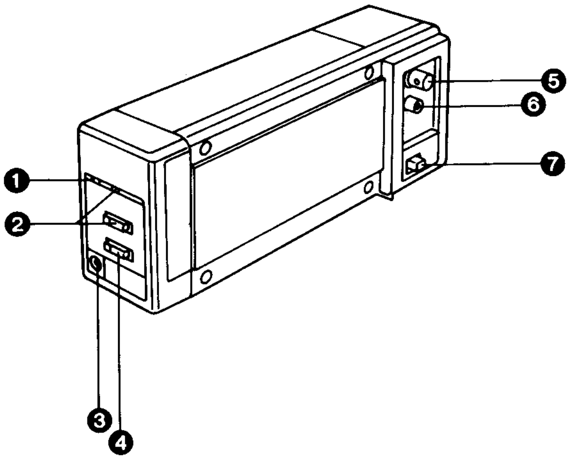

REAR SIDE

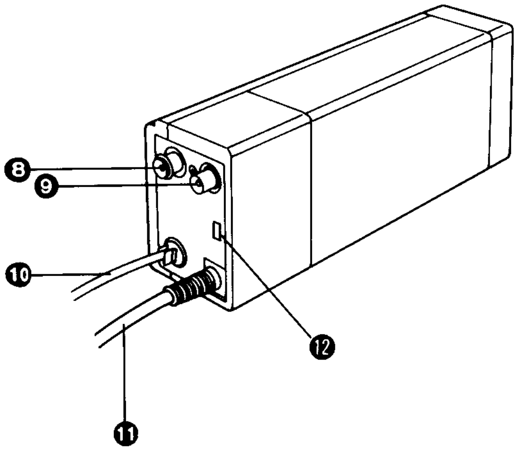

1. Charging Indicator
2. Operation Switch with Indicator
3. Battery Pack Charging Socket
4. TV/VTR Selector
5. Video Output Socket
6. Audio Output Socket
7. Power On/Off Switch
8. RF Input Socket
9. RF Output Socket
10. Mains Lead
11. Adaptor Cable
12. CH Select (for EN/A/EA)

2. DISASSEMBLY METHOD

1. Removal of Top Case

Unscrew the 4 screws (A) and remove the Top Case.

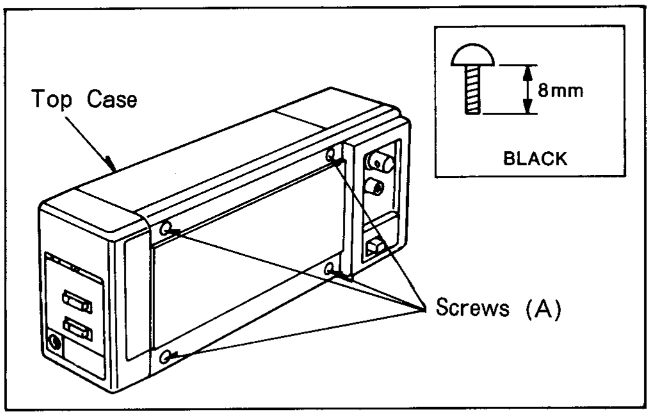

Fig.1

2. Removal of Front Panel

Remove the Front Panel disconnecting the connector P1.

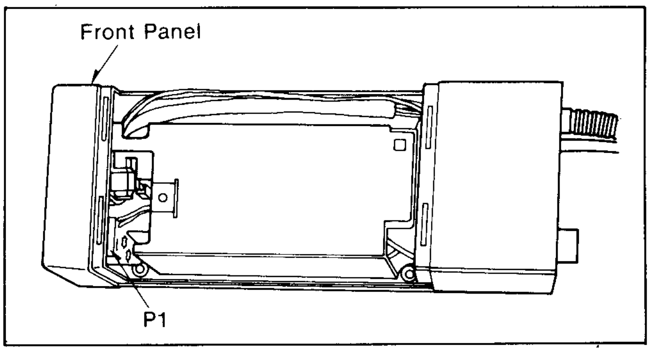

Fig.2

3. Removal of Main Circuit Board

Unscrew the 2 screws (B) and remove the Main Circuit Board.

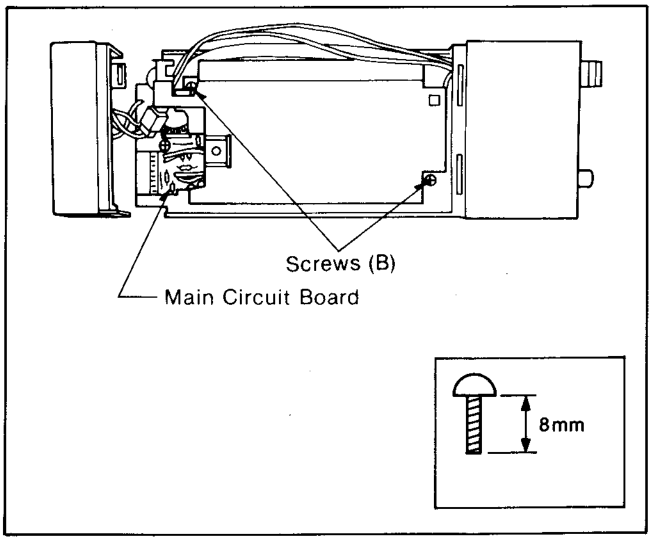

Fig.3

4. Removal of Rear Case

Unscrew the 3 screws (C) remove the Rear Case.

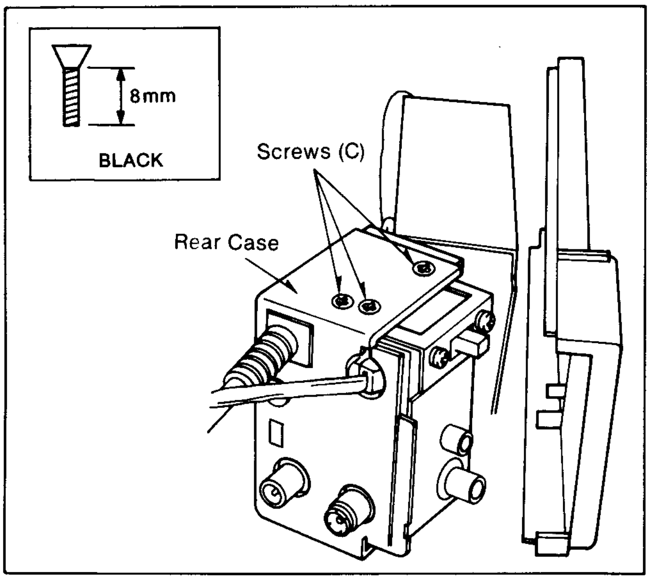

Fig.4

5. Removal of Main Sield Case

Diconnect the connector P6 and connector (E) and remove the Main Shield Case.

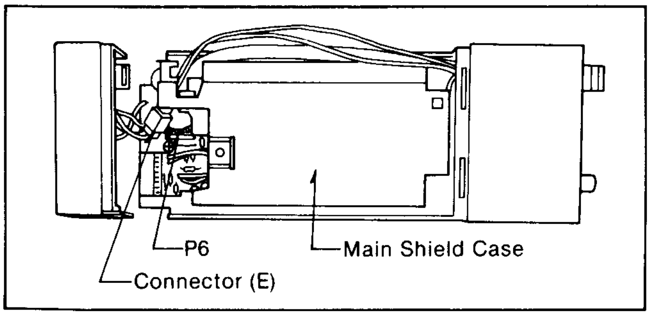

Fig.5

6. Removal of Front Panel Circuit Board

Unscrew the 2 screws (F) and remove the Front Panel Circuit Board.

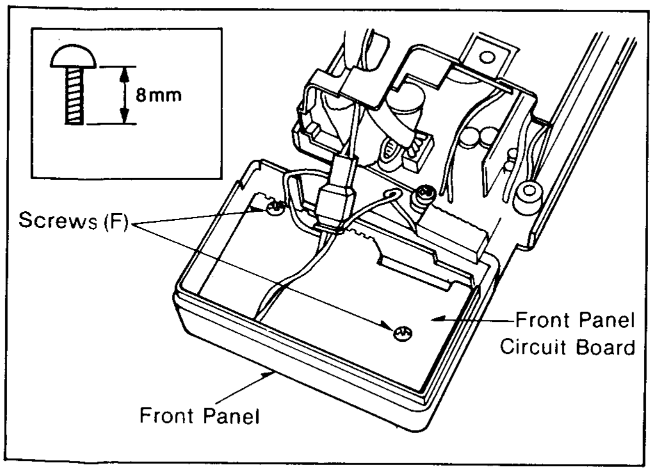

Fig.6

7. Removal of A–V Terminal Circuit Board

Remove shield case and unscrew the 2 screws (G) and remove the A–V Terminal Circuit Board.

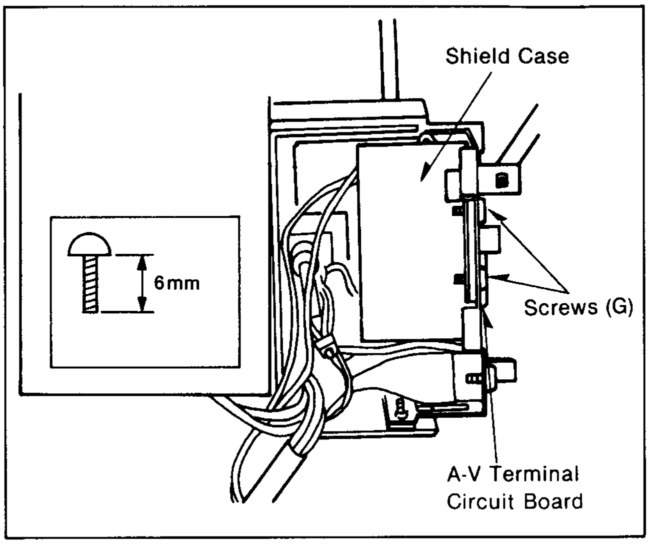

Fig.7

3. ELECTRICAL ADJUSTMENT PROCEDURES

This section provides complete electrical adjustment procedures which may be required for electronic circuit of the AC Adaptor.

3-1. TEST EQUIPMENTS

To perform the electrical adjustments completely following equipments are required.

1. D.V.M. (Digital Volt Meter)
   Voltage Range :0.001~50V
2. Oscilloscope
   Voltage Range :0.005~50V/div
3. DC Ammeter
   Current Range :0~10A
4. DC Voltmeter
   Voltage Range :0~20V
5. Plastic Tip Driver
6. Resistor (5ohm Variable 200W)
7. DC Power Supply (5A/20V)

3-2. POWER SUPPLY OUTPUT VOLTAGE ADJUSTMENT

TP	ADJ.	MODE	INPUT
CONNECTOR P6-(1) (+) -(3) (−)	VR101	POWER SUPPLY	
TAPE	**M. EQ.**	**SPEC.**	
	D.V.M.	13.0+−0.3V	

1. Connect the VHS MOVIE to AC Adaptor.
2. Turn the unit in REC−PLAY mode.
3. Adjust VR101 so that the output voltage at pin 1 of connector P6 is within specification.

3-3. INITIAL CHARGE CURRENT AND SCHMITT VOLTAGE ADJUSTMENT

TP	ADJ.	MODE	INPUT
BATTERY HOLDER-(+) -(−)	VR102 VR103	CHARGE	
TAPE	**M. EQ.**	**SPEC.**	
	DC AM/D.V.M	A=1.5+−0.005[A] VR102 From High to Low VR103	

1. Make the connection as shown below.

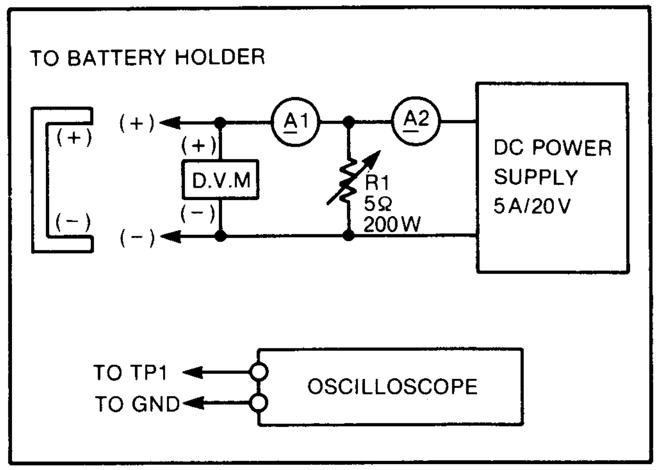

Fig.8

2. Adjust the output of the DC power supply so that the indication of the DC voltmeter becomes 14.0V and adjust R1 so that the indication of the DC ammeter (A2) becomes 3.0A.
3. Adjust VR102 so that the indication of the DC ammeter (A1) becomes 1.5+−0.05A.
4. Adjust the output level of the DC power supply to 15.3V.
5. Adjust the VR103 so that voltage at TP101 is changed from high (approx.15V) to low (approx.0.5).

It is also available to use a resistor 5ohm/50W or 2 pieces of 10ohm/20W resistors inparallel use or equevalent, instead of variable resistor, 5o hm/200W to get specified current.

4. AC ADAPTOR BLOCK DIAGRAM

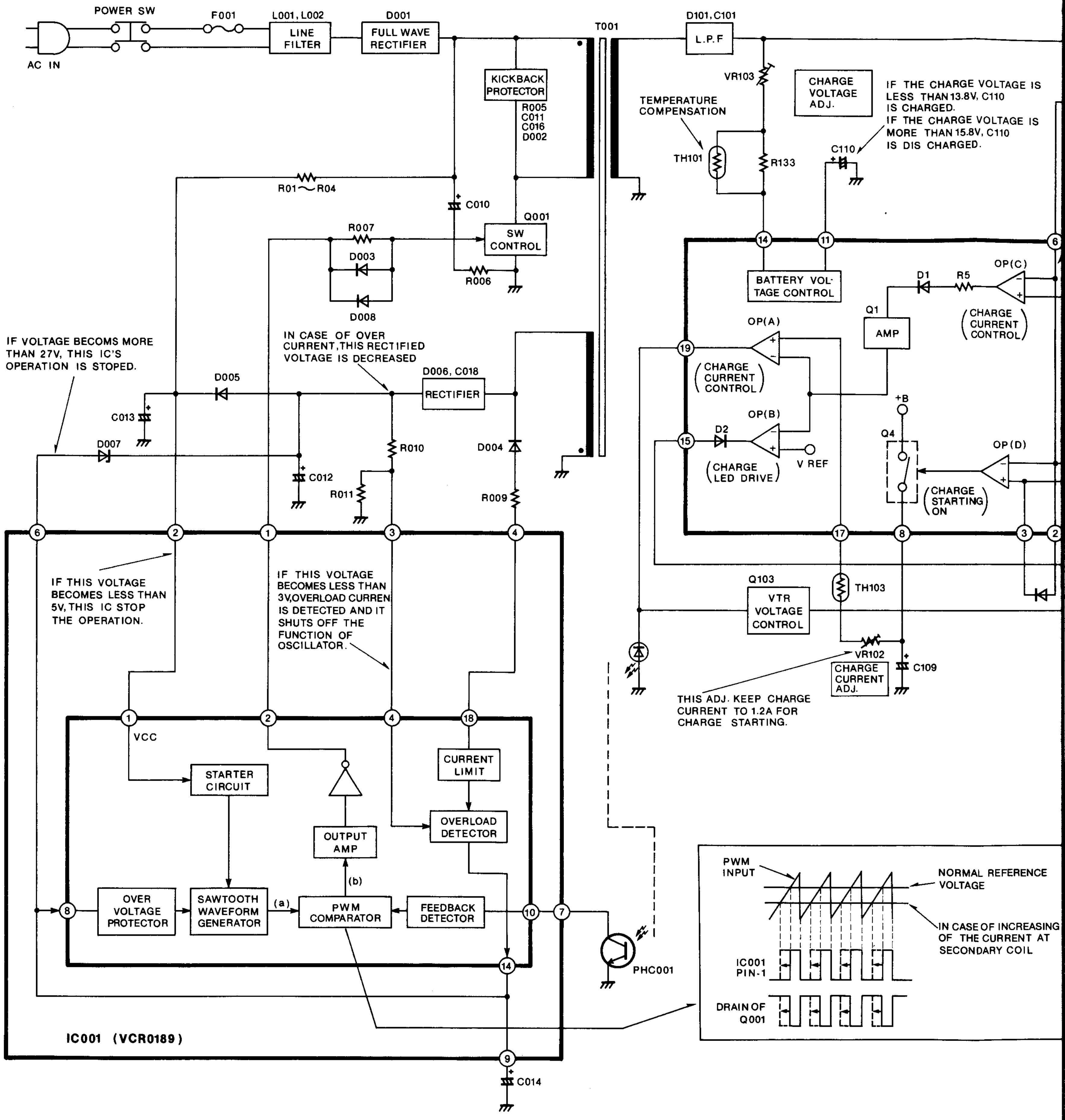

4. AC ADAPTOR BLOCK DIAGRAM

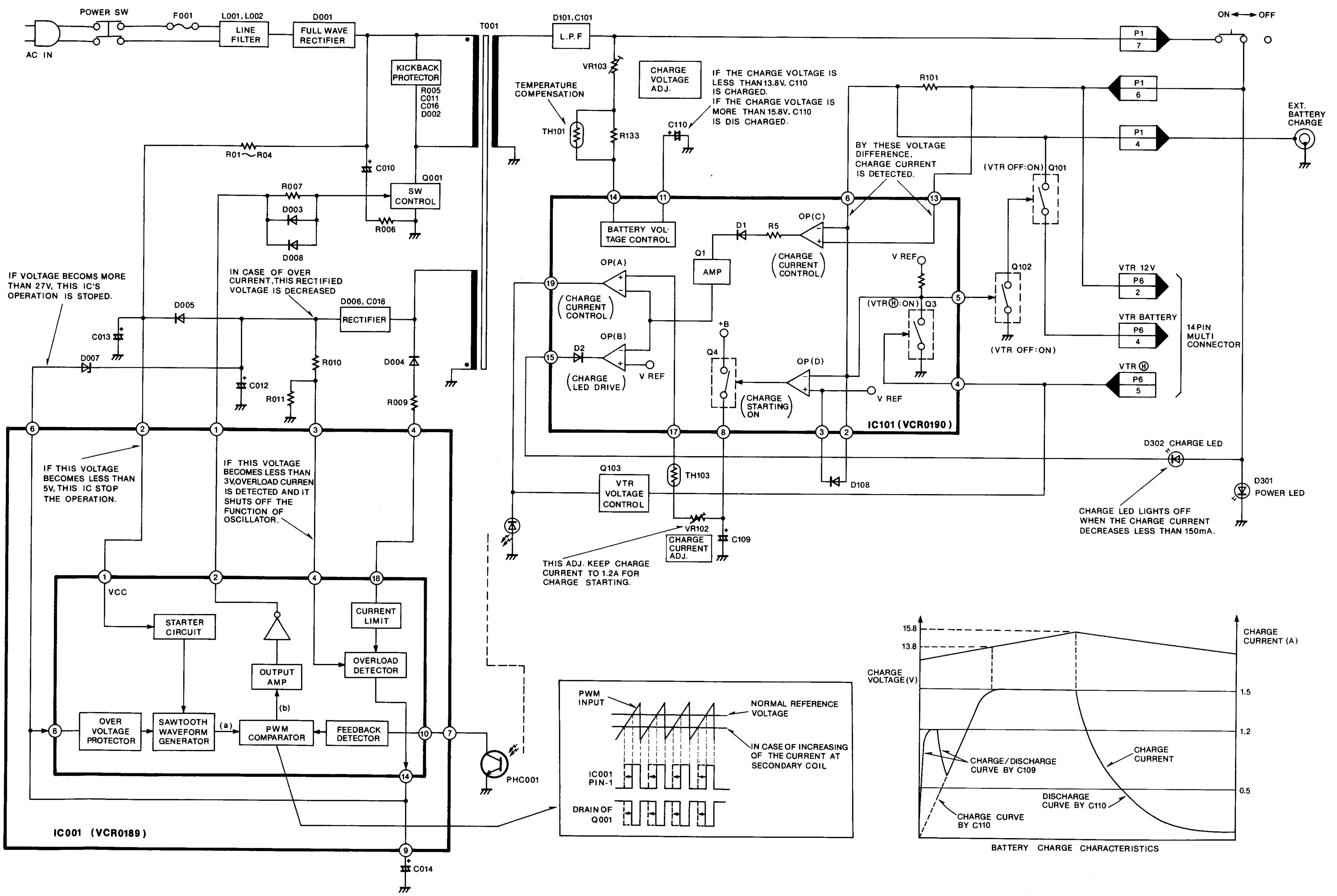

5. AC ADAPTOR SCHEMATIC DIAGRAM

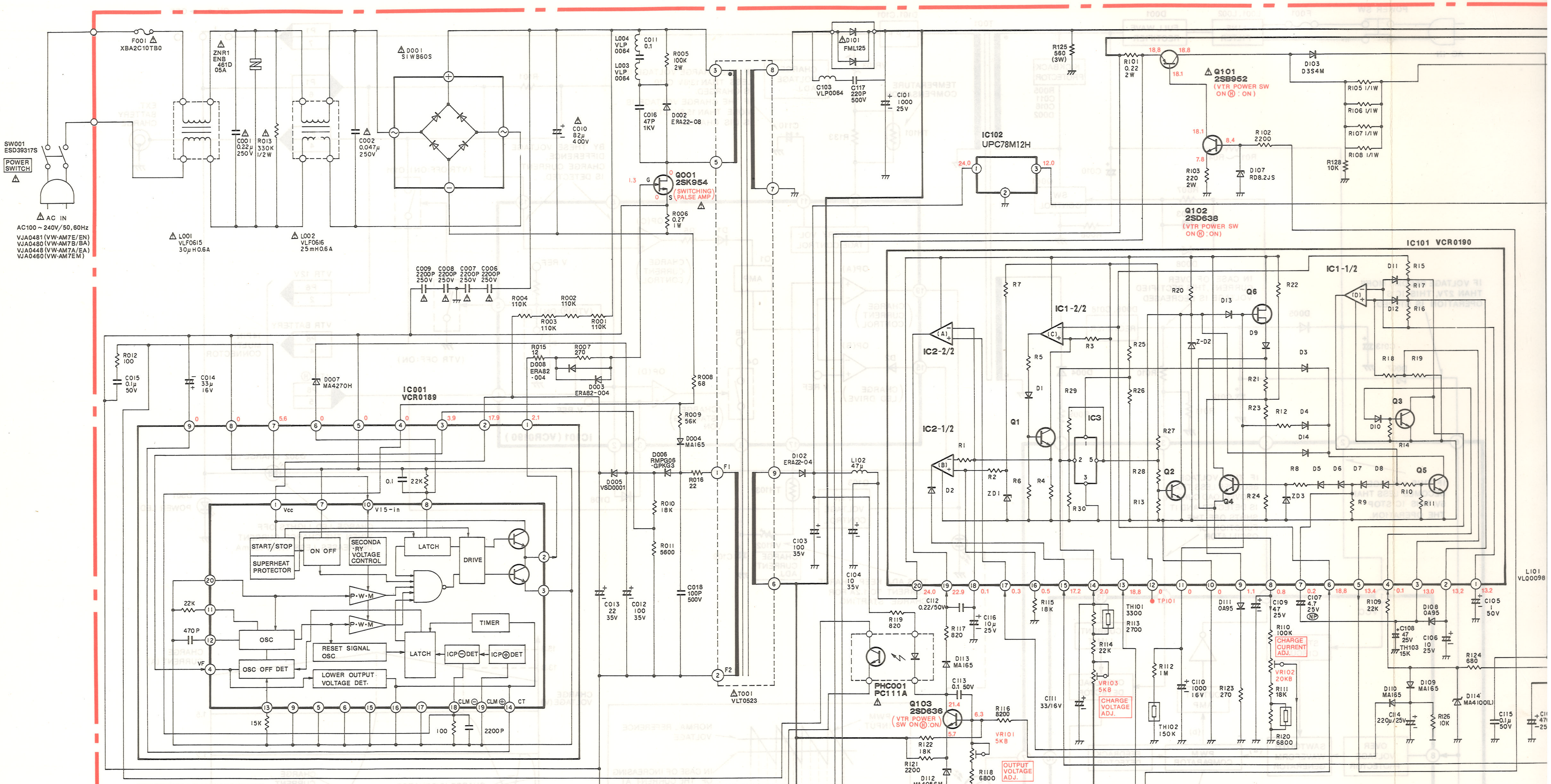

IMPORTANT SAFETY NOTICE:
COMPONENTS IDENTIFIED WITH THE MARK ⚠ HAVE THE SPECIAL CHARACTERISTICS FOR SAFETY.
WHEN REPLACING ANY OF THESE COMPONENTS, USE ONLY THE SAME TYPE.

NOTE: DO NOT USE THE PART NUMBER SHOWN ON THIS DRAWING FOR ORDERING. THE CORRECT PART NUMBER IS SHOWN IN THE PARTS LIST, AND MAY BE SLIGHTLY DIFFERENT OR AMENDED SINCE THIS DRAWING WAS PREPARED.

NOTE 1. WHEN MEASURE THE VOLTAGE OF THE AC ADAPTOR, CONNECT THE PROBE (EARTH SIDE) OF MEASURING EQUIPMENT AS FOLLOWS.
PRIMARY SIDE .... MAIN C.B.A. C010 −
SECONDARY SIDE ..... AC ADAPTOR CHASSIS EARTH

NOTE 2. THE DC VOLTAGE INDICATED IN PRIMARY SIDE IS MEASURED WHEN INPUT AC 220V IS APPLIED.

NOTE: THE MEASUR

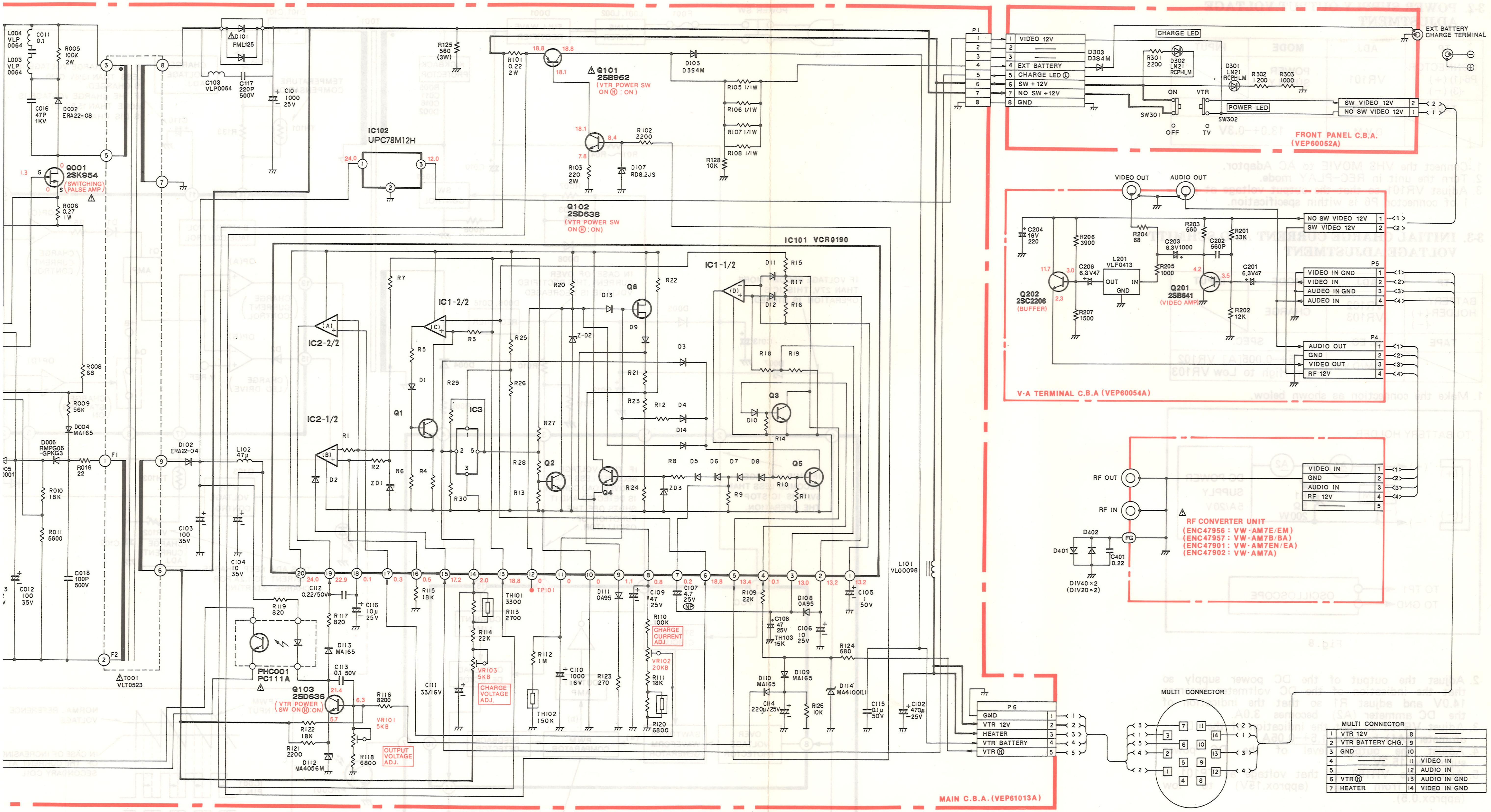

NOTE 1. WHEN MEASURE THE VOLTAGE OF THE AC ADAPTOR, CONNECT THE PROBE (EARTH SIDE) OF MEASURING EQUIPMENT AS FOLLOWS.
PRIMARY SIDE .... MAIN C.B.A. C010 —
SECONDARY SIDE ..... AC ADAPTOR CHASSIS EARTH

NOTE 2. THE DC VOLTAGE INDICATED IN PRIMARY SIDE IS MEASURED WHEN INPUT AC 220V IS APPLIED.

NOTE: THE MEASUREMENT MODE OF DC VOLTAGE ON THIS DIAGRAM IS NOLOAD.

6. MAIN C.B.A. (VEP61013A), FRONT PANEL C.B.A. (VEP60054A) & A-V TERMINAL C.B.A. (VEP60052A)

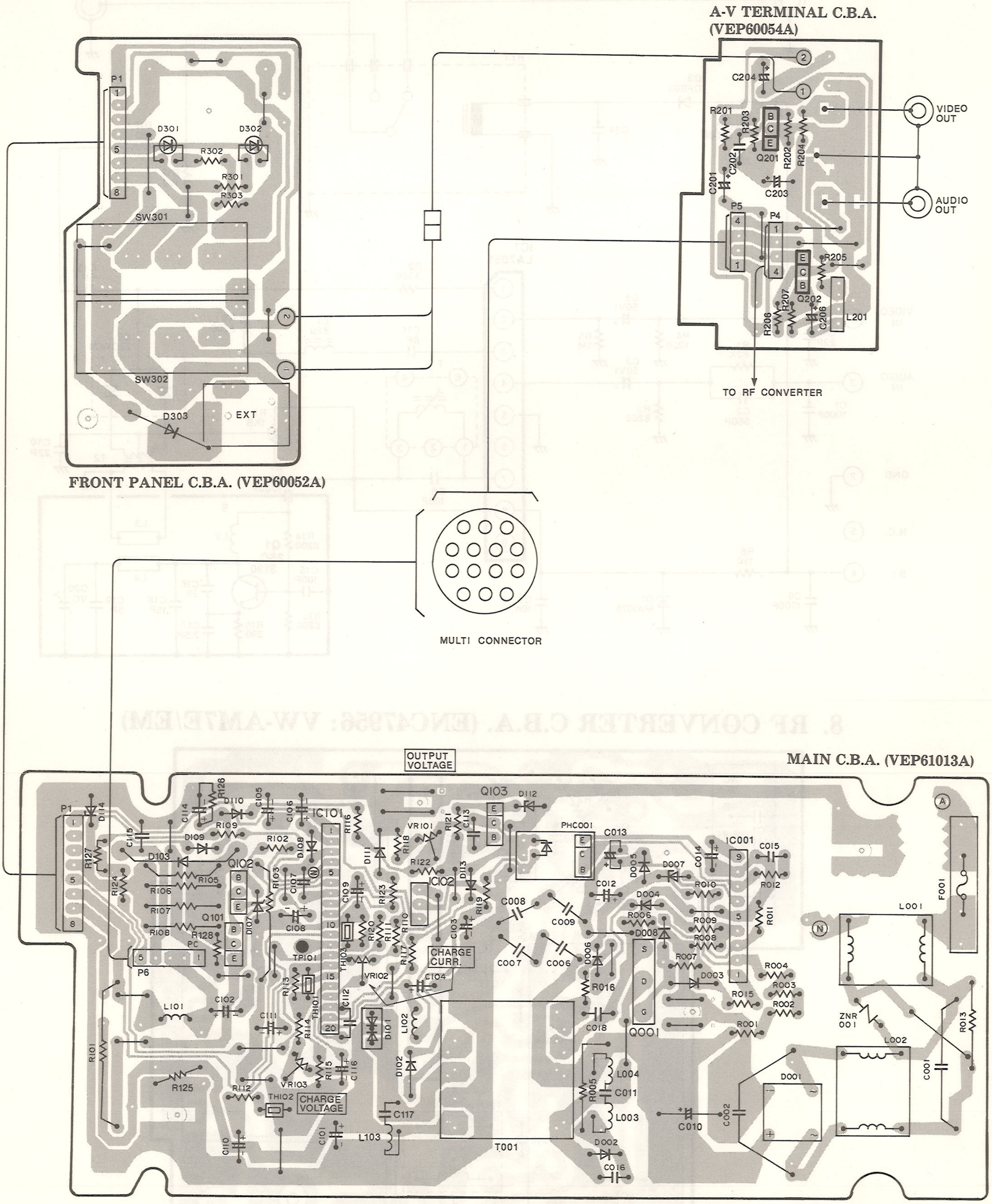

7. RF CONVERTER SCHEMATIC DIAGRAM (VW-AM7E/EM)

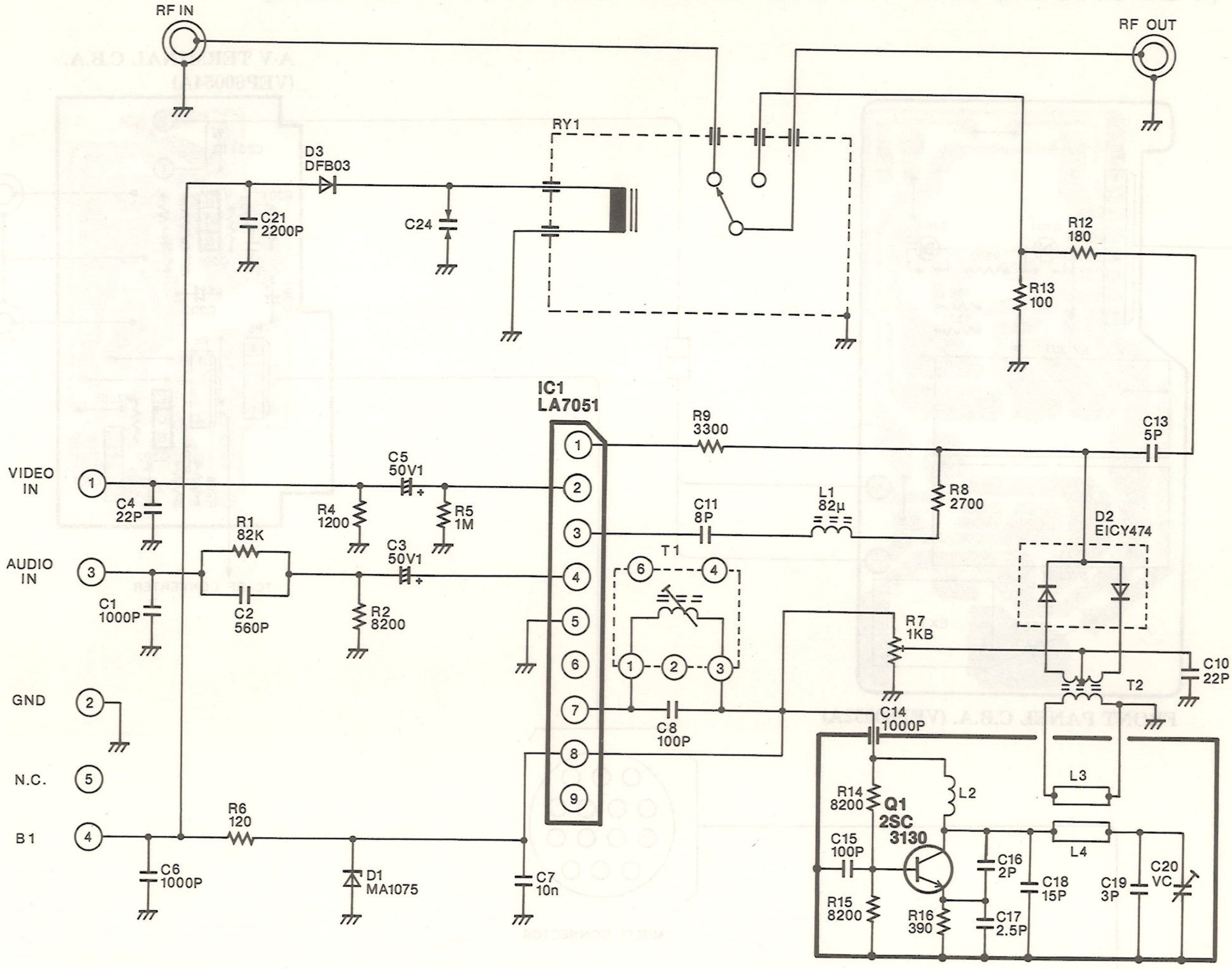

8. RF CONVERTER C.B.A. (ENC47956: VW-AM7E/EM)

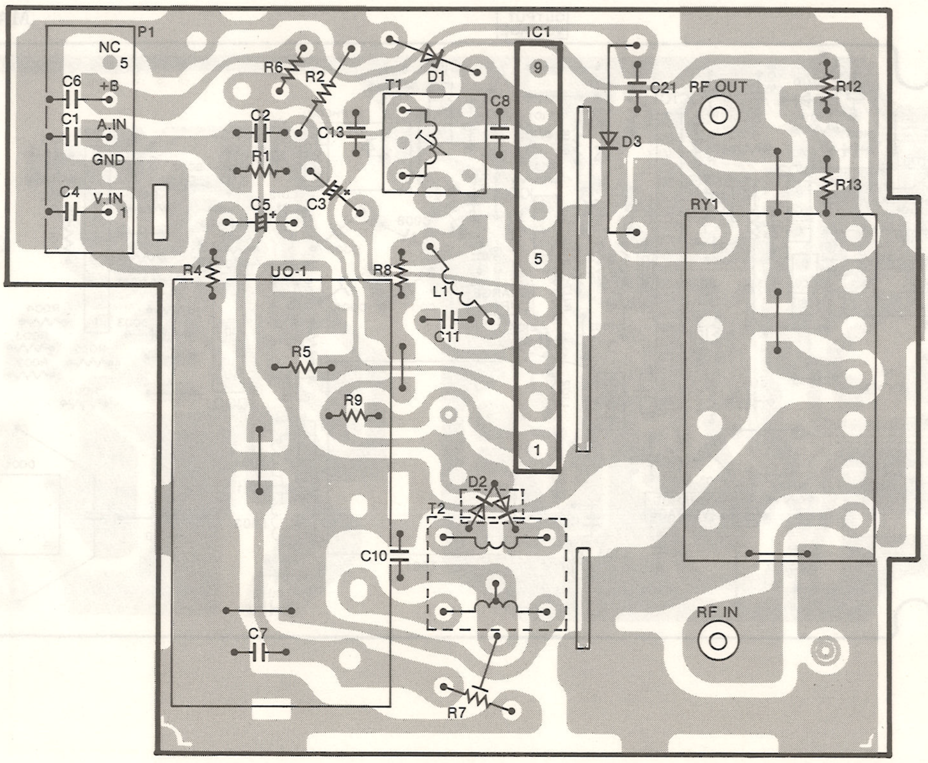

9. RF CONVERTER SCHEMATIC DIAGRAM (VW-AM7B/BA)

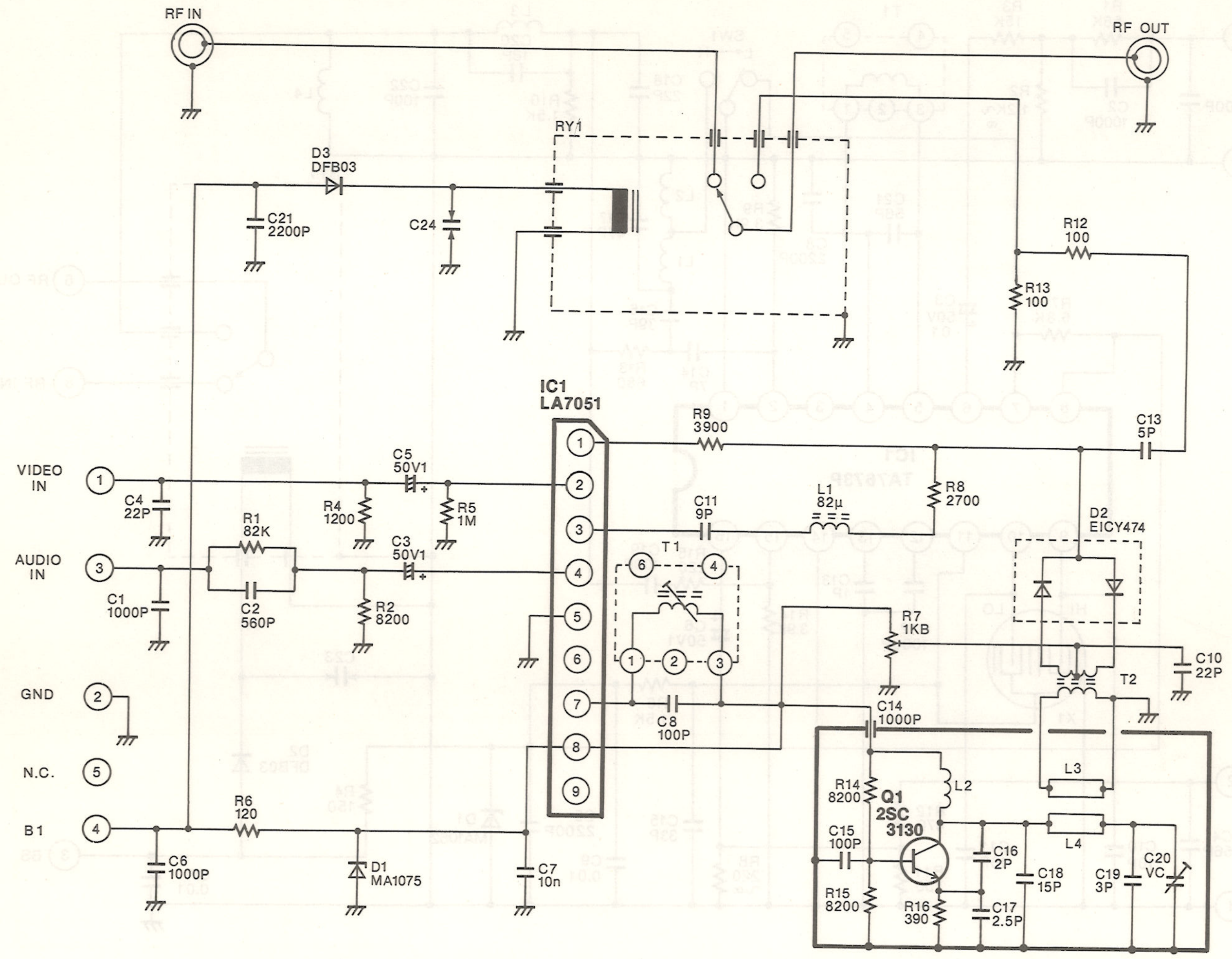

10. RF CONVERTER C.B.A. (ENC47957: VW-AM7B/BA)

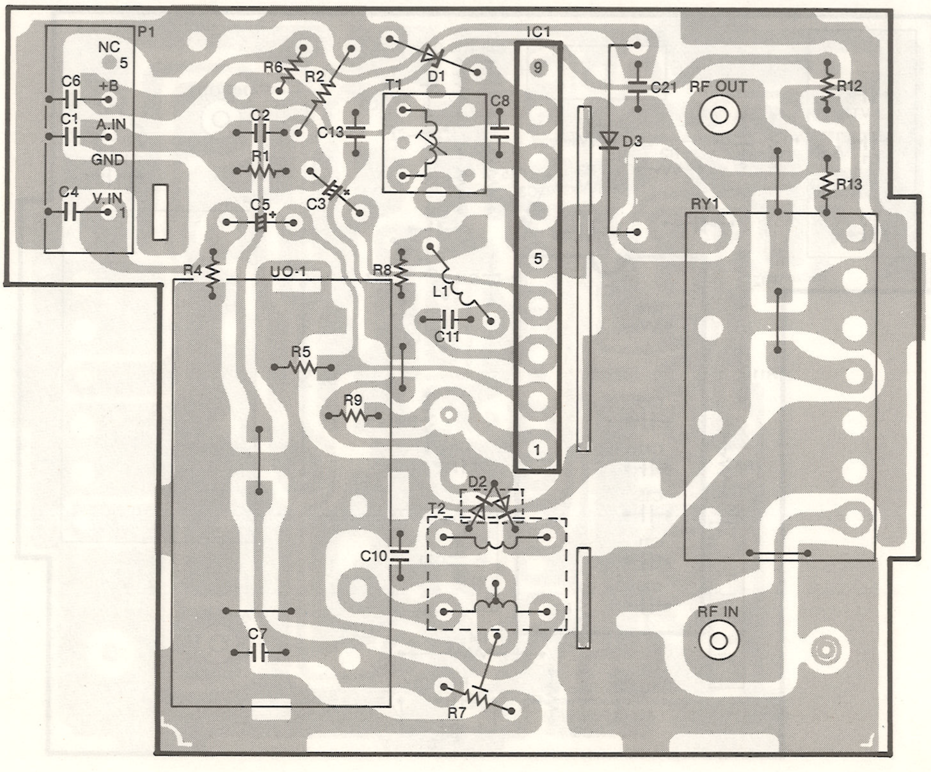

11. RF CONVERTER SCHEMATIC DIAGRAM (VW-AM7EN/EA)

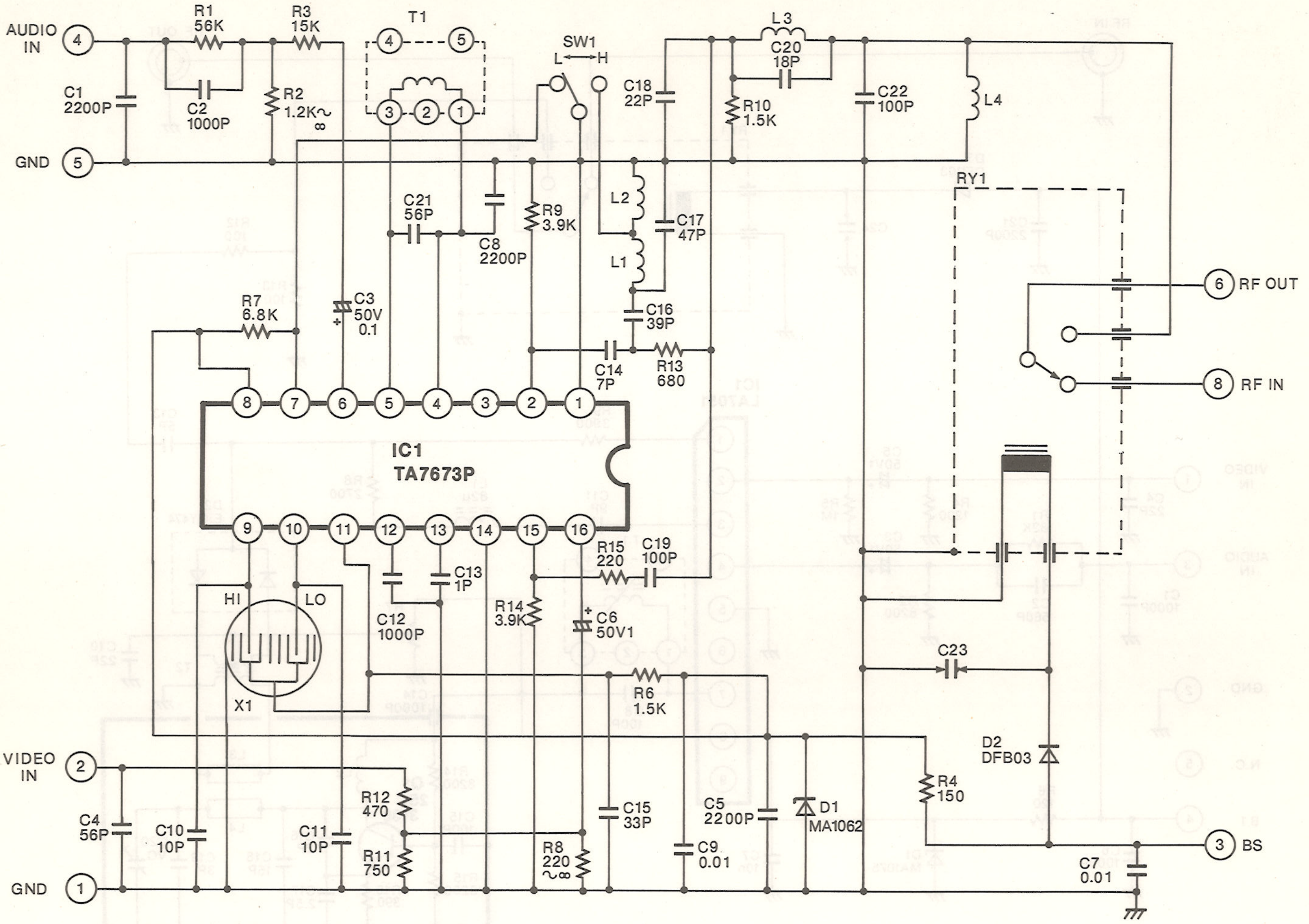

12. RF CONVERTER C.B.A. (ENC47901: VW-AW7EN/EM)

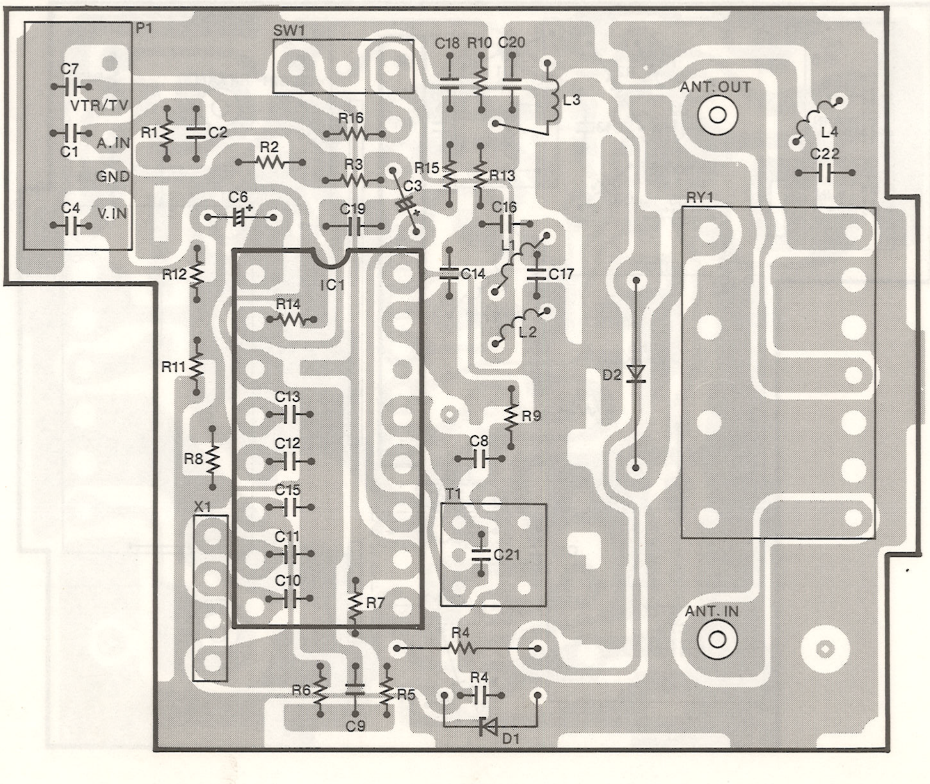

13. RF CONVERTER SCHEMATIC DIAGRAM (VW-AM7A)

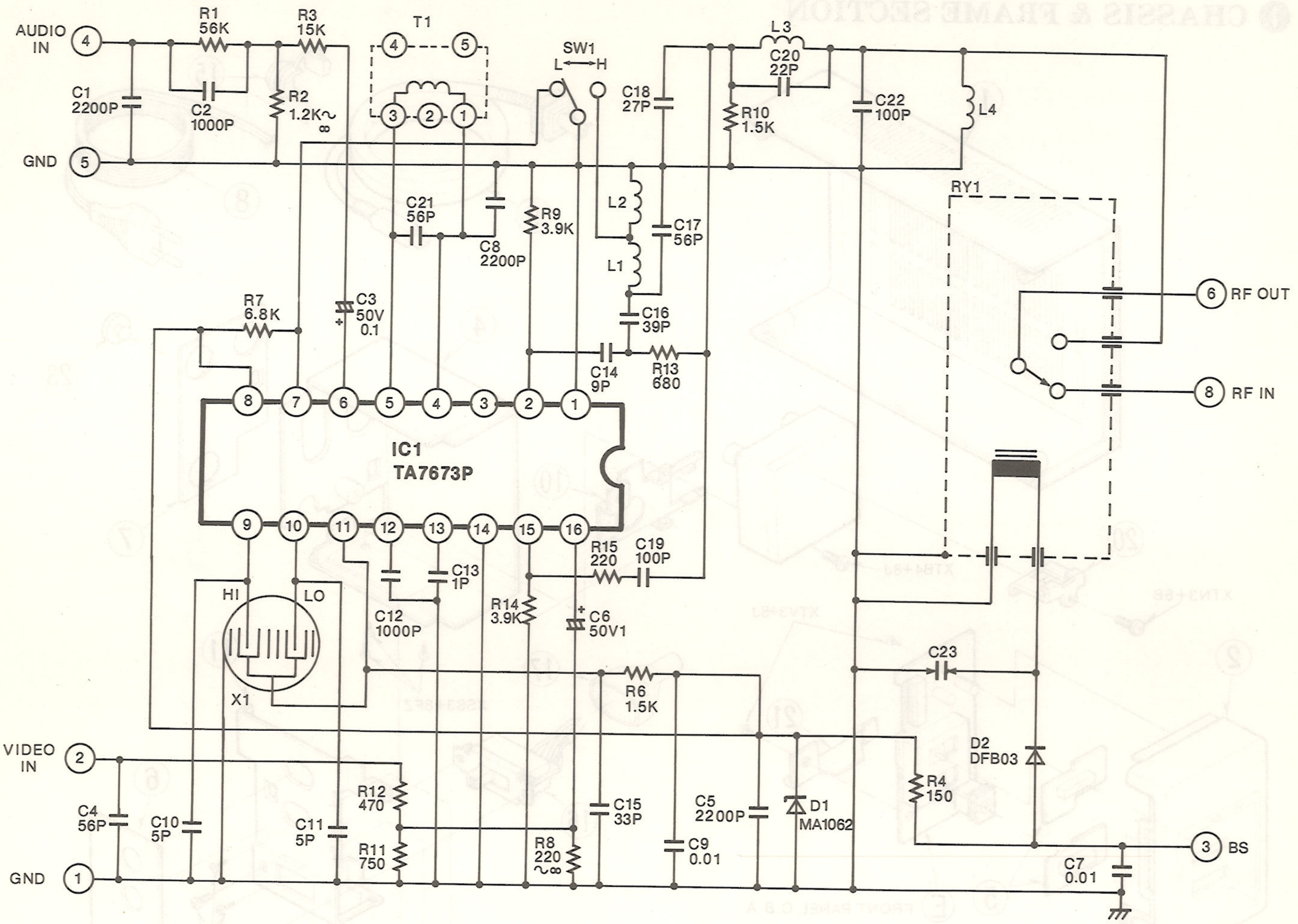

14. RF CONVERTER C.B.A. (ENC47902: VW-AM7A)

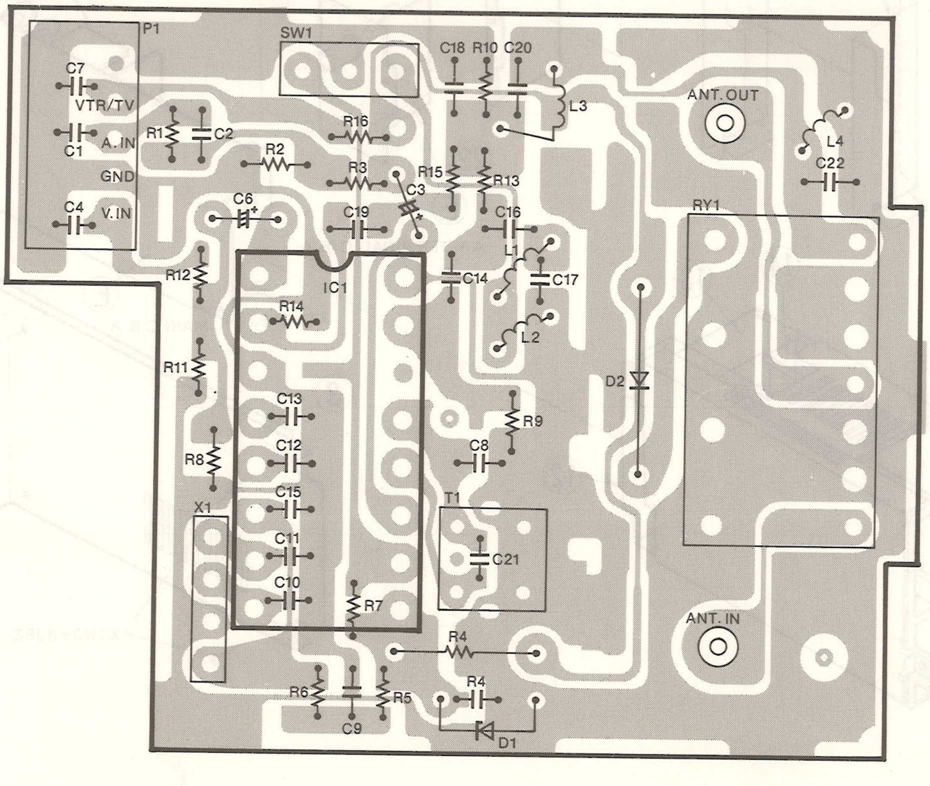

15. EXPLODED VIEWS

❶ CHASSIS & FRAME SECTION

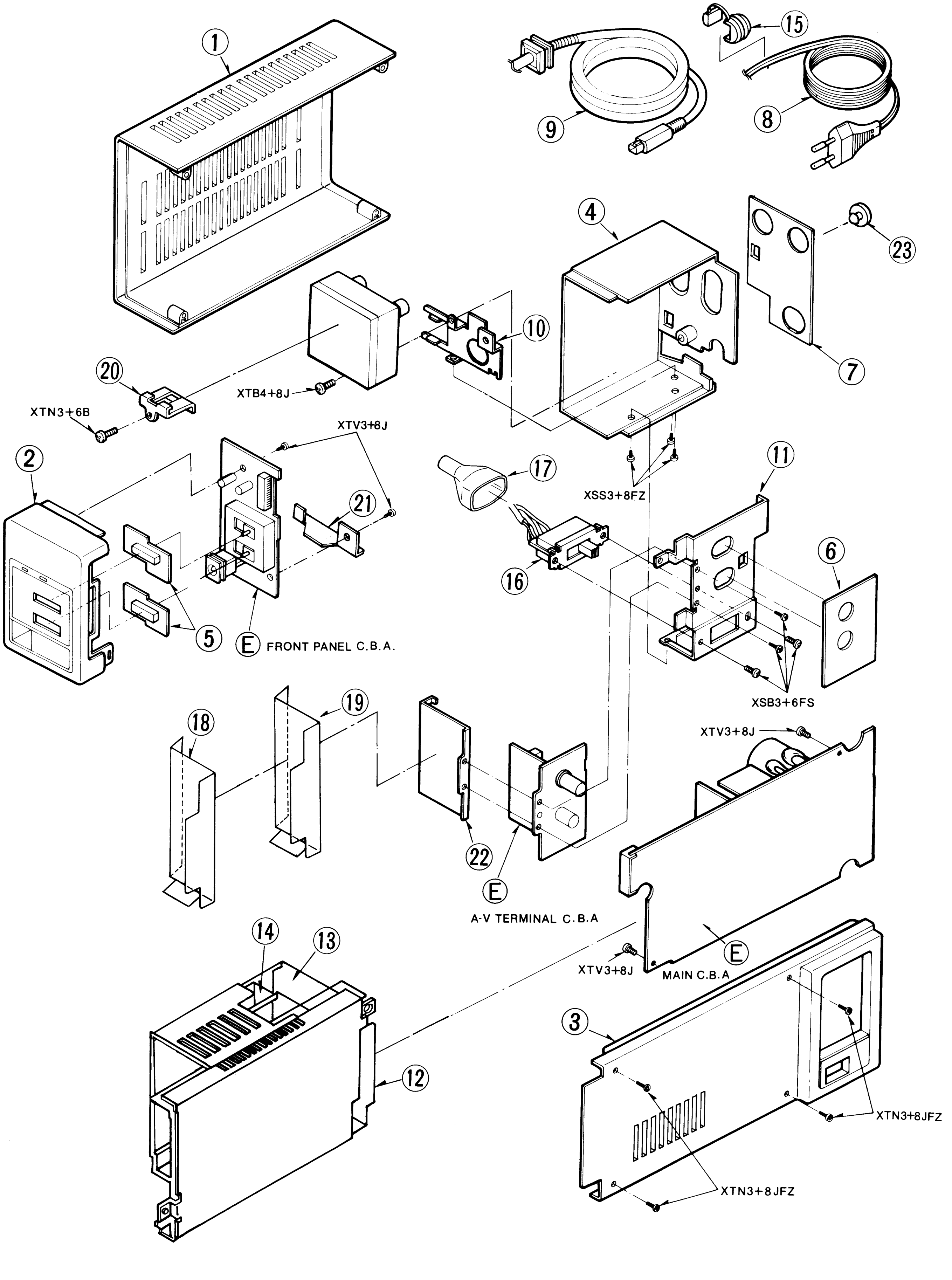

❷ PACKING PARTS SECTION (VW-AM7A/BA)

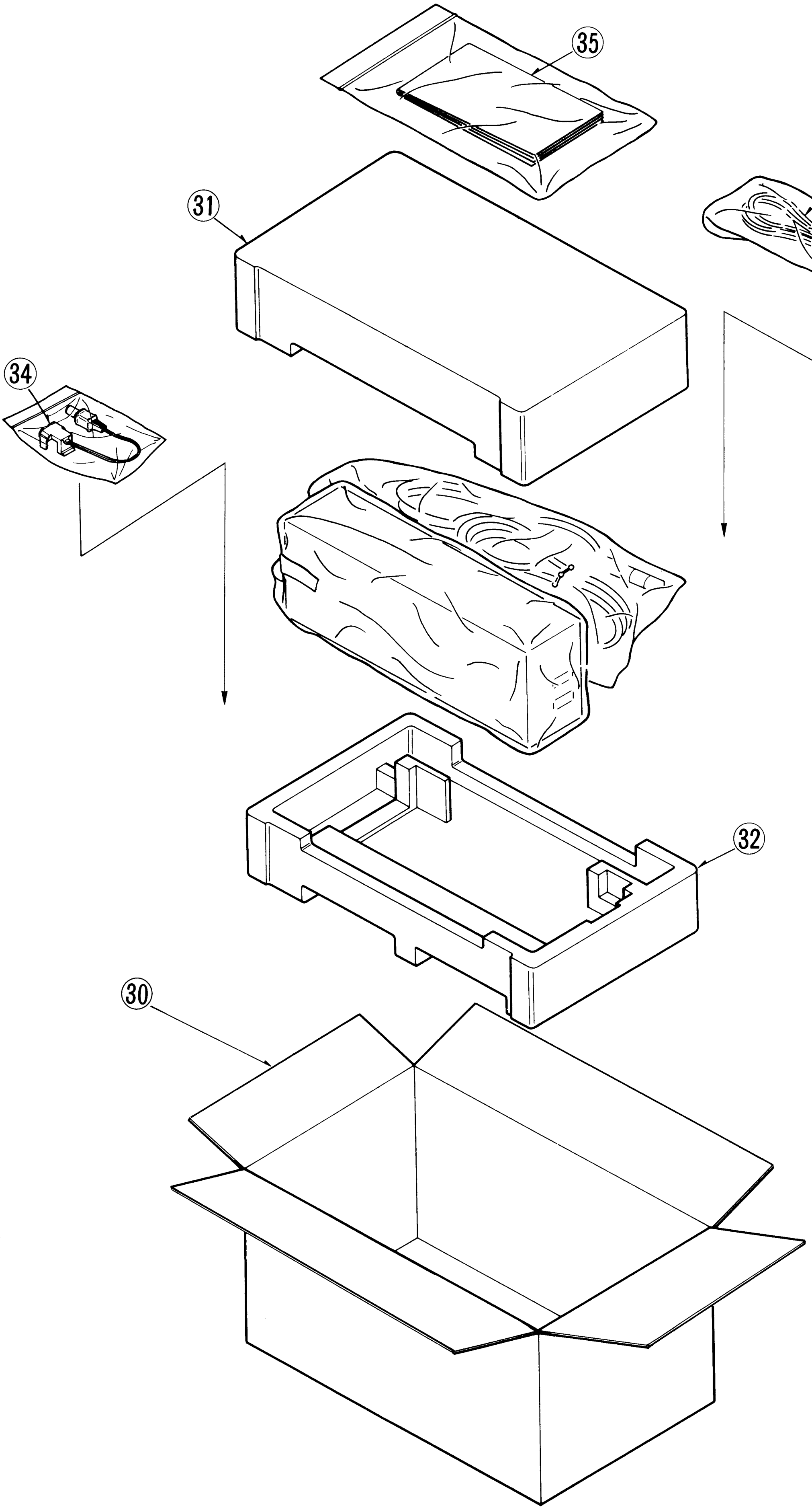

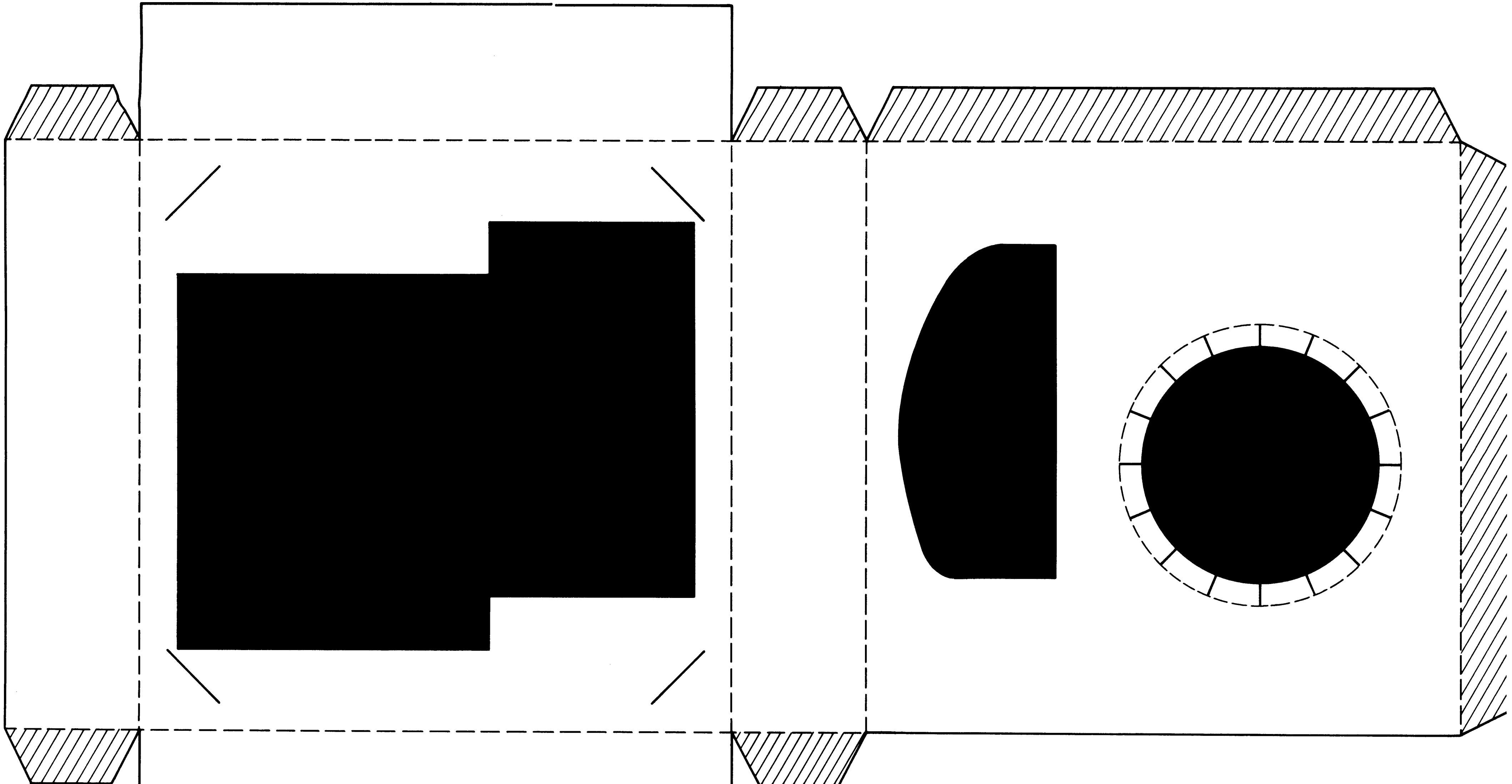

Assembling Procedure.
1) Cut the " ——— " line.
2) Fold the "— — — —" line and paste on the " ▨ " part, and assemble (make) the box as shown in right side.
3) Use the this box when you adjust the AWT white tracking.

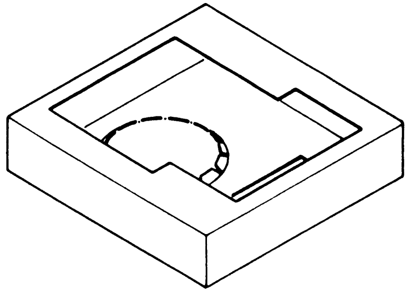

National/Panasonic

MATSUSHITA ELECTRIC

Printed in Japan